INTELLECTUAL PROPERTY OFFICE OF SINGAPORE
PATENT AGENTS QUALIFYING EXAMINATION 2018

PAPER C: INFRINGEMENT AND VALIDITY OF SINGAPORE PATENT
24 October 2018, Wednesday
1330 – 1730 hrs

Maximum Time: 4 Hours (includes reading time) Maximum Marks: 100

INTELLECTUAL PROPERTY OFFICE OF SINGAPORE

INSTRUCTIONS TO CANDIDATES

1. This Question Paper consists of 26 pages, including the cover pages.

2. Type your answers in English. Answers in any other language will not be marked.

3. You are given one hard copy of the Question Paper. The soft copy of the Question Paper is also provided in the given laptop.

4. Only answers and/or drawings typed or indicated in the Answer Script template provided by the Examination Secretariat will be considered. Candidates should not change the given format of the Answer Script or type in the margin.

5. The information provided in the Question Paper may be obtained from actual situations or modified therefrom for the purpose of this examination. You should accept the facts given in the paper and assume that the prior art given is exhaustive.

6. You are to advise the client on the infringement and validity of the relevant patent(s), and on the other questions posed by the client. Your advice can be in the form of notes or a letter to the client, but in either case, you should provide the reasons for your advice. Marks are awarded more for the points selected for discussion and the reasoning displayed, rather than for the conclusions reached.

TO BE CONTINUED

PAPER C: INFRINGEMENT AND VALIDITY OF SINGAPORE PATENT
24 October 2018, Wednesday
1330 – 1730 hrs

Maximum Time: 4 Hours (includes reading time) Maximum Marks: 100

7. The maximum mark allocation for each category is as follows.

S/N	Category	Marks
1	Construction	34 marks
2	Infringement	13 marks
3	Validity – Novelty	23.5 marks
4	Validity – Inventive Step	8.5 marks
5	Advice and Miscellaneous Issues	21 marks
		100 marks

8. The documents provided in this Question Paper are:

a. Cover Page (2 pages);
b. Client Letter Dated 24 October 2018 (2 pages);
c. Document A: SG Patent No. 10201742359X (7 pages including drawings);
d. Document B: Technical Flyer of Double-Up DVD Case (4 pages including drawings);
e. Document C: Container for Compact Discs (4 pages including drawings); and
f. Document D: SG Patent No. 10201400001X (7 pages including drawings).

END

PAPER C: INFRINGEMENT AND VALIDITY OF SINGAPORE PATENT
24 October 2018, Wednesday
1330 – 1730 hrs

Maximum Time: 4 Hours (includes reading time) Maximum Marks: 100

Client Letter Dated 24 October 2018 (1/2)

Dear Patent Attorney,

Thanks for your help in getting our Singapore patent (**Document A**). Our patented container for compact discs (CD) has been wildly successful until about 2 months ago when we noticed a drastic drop in sales volumes.

Upon making enquiries with our customers, we found out that a company called Infringion is selling a CD container which can hold up to four CDs at a time. Our customers say that they prefer Infringion's container - called the "Double-Doubly-Up Tray" - because it is more cost effective to hold four CDs in a container and also storage-saving.

I managed to get hold of a copy of the technical flyer for Infringion's CD container (**Document B**) and discovered to my surprise that their container is identical to ours.

I contacted Infringion immediately and spoke with their managing director. I told him about our patent, which he claimed not to know anything about. I believe that he is not being honest because we had, on your good advice, been marking all our containers with the word "PATENTED" together with the patent number. We therefore believe that there is no way that Infringion had never come across it. Infringion's managing director also claimed that they have been selling their CD container for "a very long time". Again, I don't believe him because our sales only took a tumble very recently – about 2 months ago.

Today, we receive a letter from Infringion's patent attorney claiming that our patent is invalid over the attached local magazine publication (**Document C**) and Infringion’s lapsed Singapore patent (**Document D**). I do not see how these documents are relevant since the CD containers in the documents are different than ours. Further, Infringion’s patent has already lapsed.

PAPER C: INFRINGEMENT AND VALIDITY OF SINGAPORE PATENT
24 October 2018, Wednesday
1330 – 1730 hrs

Maximum Time: 4 Hours (includes reading time) Maximum Marks: 100

Client Letter Dated 24 October 2018 (2/2)

The letter also claims that I threatened Infringion with patent infringement proceedings. I did nothing of that sort – I only told the managing director that Infringion should stop selling their CD container because it looks exactly like ours.

Please can we arrange a meeting sometime next week to discuss how we should go from here?

Yours faithfully,
Pattern E.

Additional scenario to be considered and answered (up to 4 marks):
Assuming that **Document C** is a publication caused by Mr Oh, who is the inventor of the invention in **Document A**, how would your answer be different in such a scenario (if any)? Limit your answer to the assessment of Claim 1 of **Document A** in terms of validity only.

PAPER C: INFRINGEMENT AND VALIDITY OF SINGAPORE PATENT
24 October 2018, Wednesday
1330 – 1730 hrs

Maximum Time: 4 Hours (includes reading time) Maximum Marks: 100

Document A: SG Patent No. 10201742359X (1/7)

CONTAINER FOR A PLURALITY OF DISCS AND THE LIKE WITH CENTRAL RETENTION MEANS

Singapore Patent No. 10201742359X
Grant date: 1 May 2018
Filing date: 1 November 2017
Published on 1 April 2018
Priority claim: None
Inventor: Mr Oh

[001] The present invention relates to a container for a plurality of discs and the like.

[002] Containers for a plurality of discs, particularly CDs, DVDs and other similar optically- or magnetically-readable discs, are well-known. However, a recent survey with consumers shows that a further reduction of the size of the container is desirable for storage and aesthetic purposes.

[003] The aim of the present invention is to solve the problem described above by providing a container for a plurality of discs and the like which for example, allows to retain two discs centrally while allowing to reduce the distance between the centers of the two discs.

[004] Within this aim, an object of the invention is to provide a container which allows to extract the discs very easily and simply without damaging them.

[005] Another object of the present invention is to provide a container which, thanks to its particular constructive characteristics, is capable of giving the greatest assurances of reliability and safety in use.

Document A: SG Patent No. 10201742359X (2/7)

[006] Further characteristics and advantages of the present invention will become better apparent from the description of a preferred but not exclusive embodiment of a container for a plurality of discs and the like, illustrated by way of non-limiting example in the accompanying drawings, wherein:

FIG. 1 is a perspective view of a containment body;

FIG. 2 is a perspective view of the containment body, taken from the lower face;

FIG. 3 is a plan view of the containment body;

FIG. 4 is a sectional view, taken along the line IV-IV of FIG. 3;

FIG. 5 is a sectional view of the containment body, taken along a longitudinal plane, with two discs in position;

FIG. 6 is a sectional view of the step for the pushbutton disengagement of the disc arranged upwardly;

FIG. 7 is a sectional view of the disengaged disc;

FIG. 8 is a view of an embodiment in which the containment body is provided directly by a case.

[007] With reference to the figures, the container for a plurality of discs and the like comprises a containment body, which can be constituted by a tray, generally designated by the reference numeral 1, which is connected inside a jacket, not shown in the drawings.

[008] The containment body, designated by the reference numeral 1 in FIG. 8, can be an integral part of a traditional case which is provided monolithically also with a closure cover.

[009] The type of containment body may obviously be changed and may be constituted by any one of the containment bodies typically used to provide containers for discs, particularly CDs, DVDs, and optical and/or magnetic discs in general.

Document A: SG Patent No. 10201742359X (3/7)

[0010] The containment body defines at least one recess, generally designated by the reference numeral 2, which in the specific example of two discs is substantially shaped like a figure-of-eight and forms at least one first region 3 for accommodating at least one first disc, designated by the reference letter A, and at least one second region 4 for accommodating at least one second disc B, which is arranged at a higher level than the first region.

[0011] The regions 3 and 4 have central retention means 5 and 6 which engage the central hole of the respective disc or optionally by elastic central elements, designated by the reference numerals 5' and 6', which also act at the central hole of the respective disc.

[0012] The central retention means 5 and 6 are designed to retain detachably the discs A and B inside the recess and the regions 3 and 4 have a central support 8 and a peripheral supporting protruding rim 9 on which the disc rests.

[0013] The central retention means 6 for the second disc B are arranged at a protrusion 10, which is arranged in the second region at a higher level and protrudes above the first region 3 so that the central retention means 6 are spaced from a periphery of the first disc accommodation region 3. Central retention means 6 can be spaced from said periphery in a manner such that first disc accommodation region 3 no longer overlays it.

[0014] For practical molding reasons, the protrusion 10 is arranged at a hollow 11 provided in the first region 3.

[0015] Another aspect is that in order to facilitate the correct insertion and centering of the discs inside the corresponding regions defined by the recess 2, the containment body has, at the peripheral edges of such recess, sloping edge portions 15, which in a way push and center the disc with respect to the corresponding positioning regions.

[0016] As pointed out in the drawings, the sloping edge portions 15, formed at the first region located at a lower level, is of course more conspicuous than the sloping edge provided at the second region, which is located at a higher level.

Document A: SG Patent No. 10201742359X (4/7)

[0017] Another characteristic resides in that the means for the central retention of the second disc, though being provided in a traditional manner, can behave like pushbutton means, by utilizing the flexibility of the protrusion 10, as shown clearly in FIGS. 5 to 7.

[0018] With this arrangement, by pressing the central retention means 6 or 6', the protrusion flexes with respect to the disc, so that the central retention means disengages the central hole of the disc. The disc can then be picked up easily.

[0019] To remove the first disc, it is possible to provide the indents 30, which allow to access the peripheral region of the disc in order to apply a lifting action that disengages it from the central retention means.

CLAIMS

1) A container for a plurality of discs, comprising a containment body which defines at least one recess for accommodating at least two discs, means for central retention to detachably retain at least one first disc in a first region of said at least one recess and at least one second disc in a second region of said at least one recess, the second region being arranged at a higher level than said first region, wherein said means for the central retention of said at least one second disc are arranged at said higher level and are spaced from a periphery of said first region.

2) The container according to claim 1, wherein the center distance of said first and second discs is shorter than the radius of each said discs.

3) The container according to claim 1 or 2, comprising, at peripheral edges of said at least one recess, sloping portions which are adapted to act as a centering element for said discs which can be mated with said central retention means.

PAPER C: INFRINGEMENT AND VALIDITY OF SINGAPORE PATENT
24 October 2018, Wednesday
1330 – 1730 hrs

Maximum Time: 4 Hours (includes reading time) Maximum Marks: 100

Document A: SG Patent No. 10201742359X (5/7)

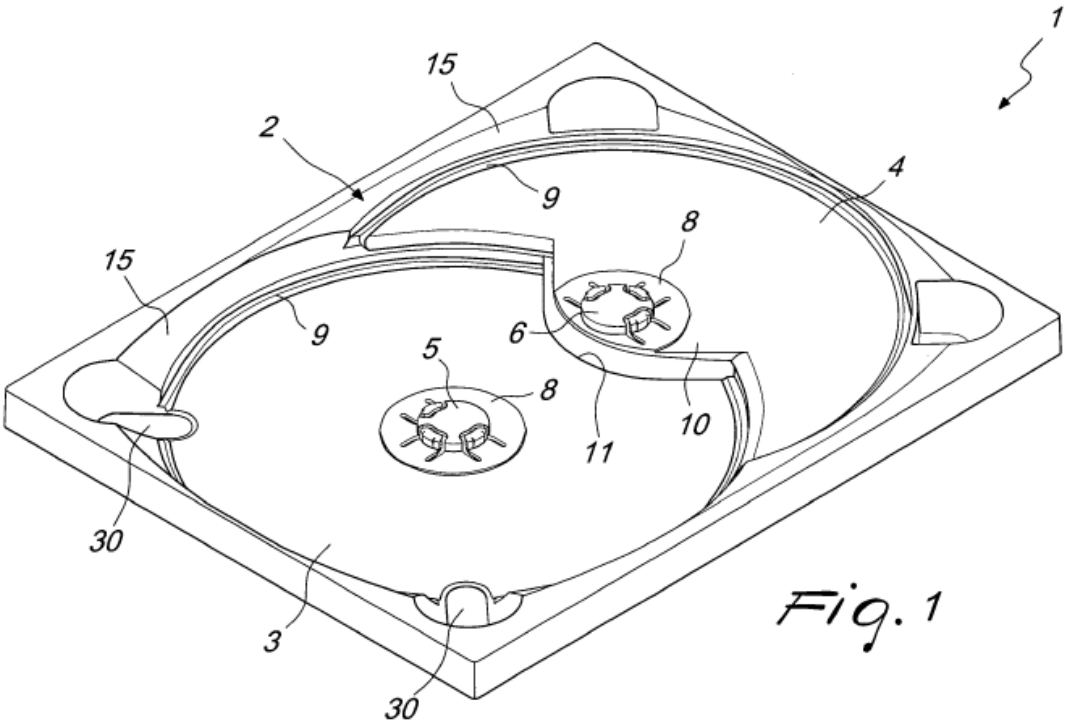

Fig. 1

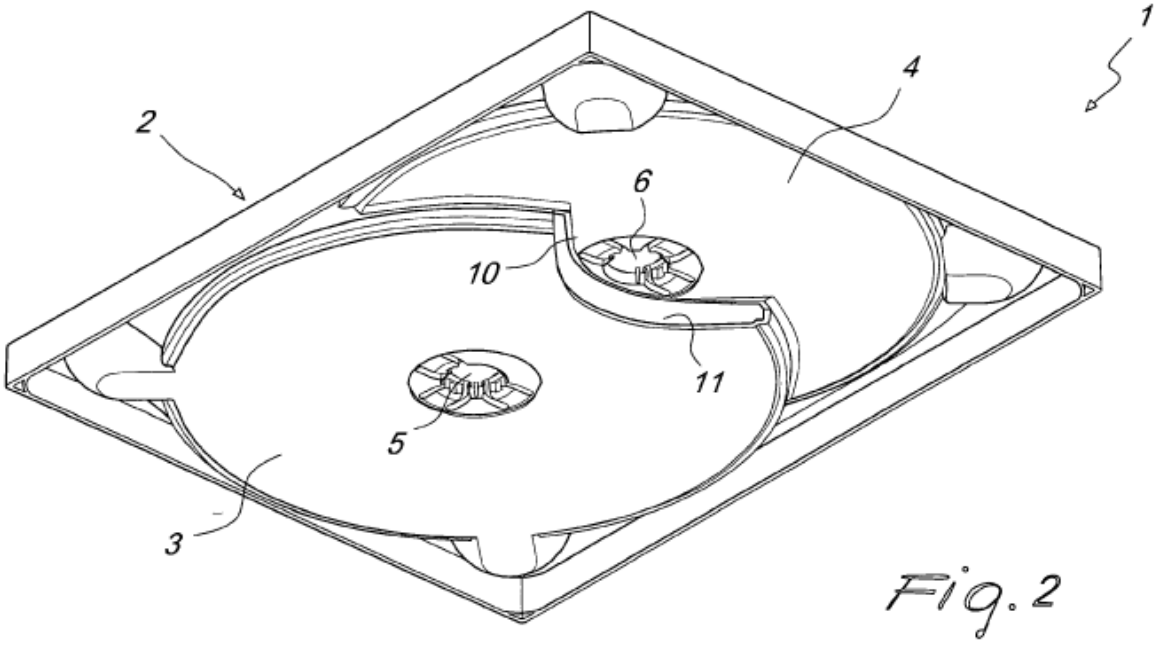

Fig. 2

PAPER C: INFRINGEMENT AND VALIDITY OF SINGAPORE PATENT
24 October 2018, Wednesday
1330 – 1730 hrs

Maximum Time: 4 Hours (includes reading time) Maximum Marks: 100

Document A: SG Patent No. 10201742359X (6/7)

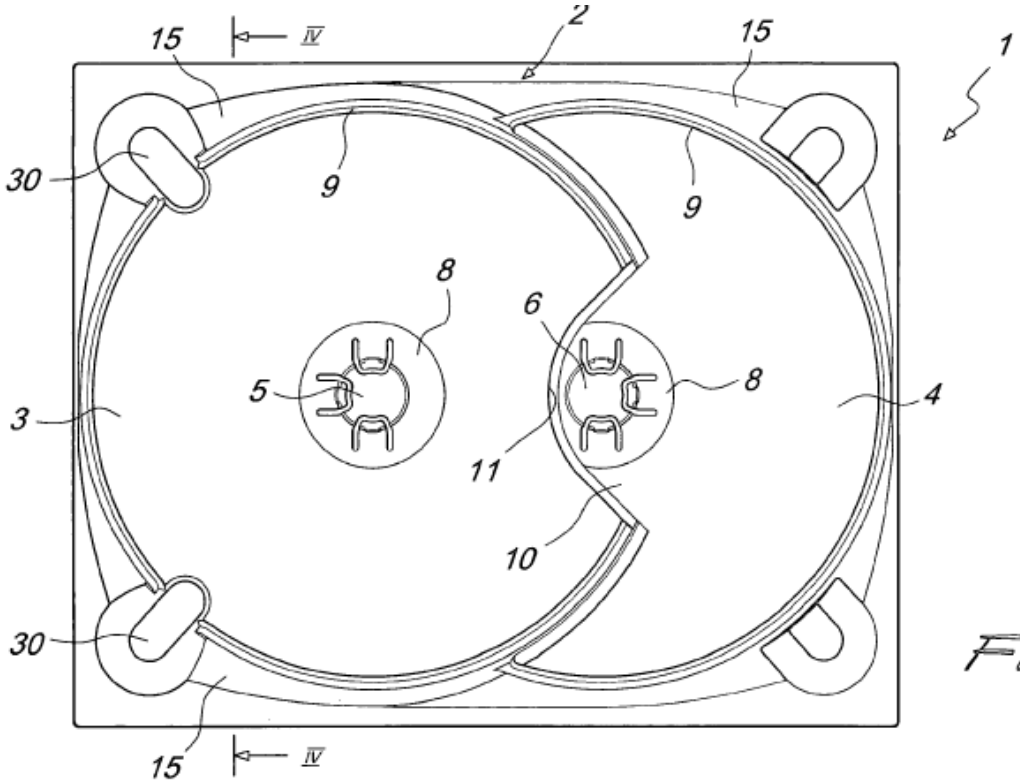

Fig. 3

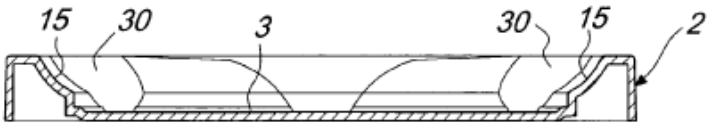

Fig. 4

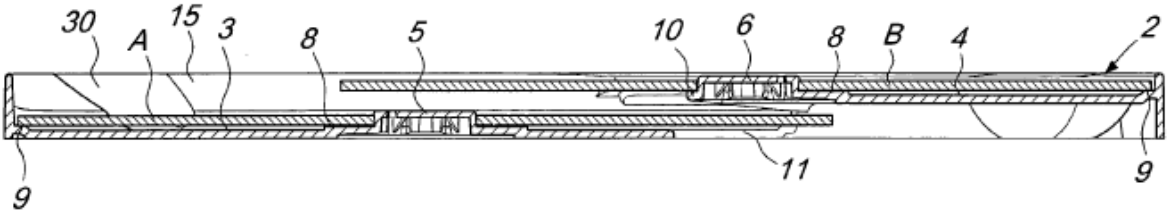

Fig. 5

PAPER C: INFRINGEMENT AND VALIDITY OF SINGAPORE PATENT
24 October 2018, Wednesday
1330 – 1730 hrs

Maximum Time: 4 Hours (includes reading time) Maximum Marks: 100

Document A: SG Patent No. 10201742359X (7/7)

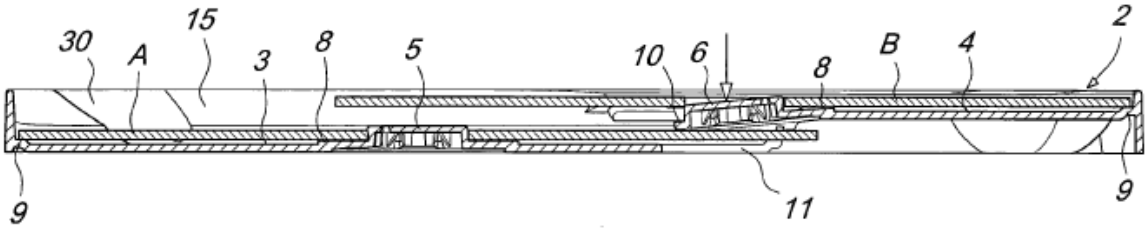

Fig. 6

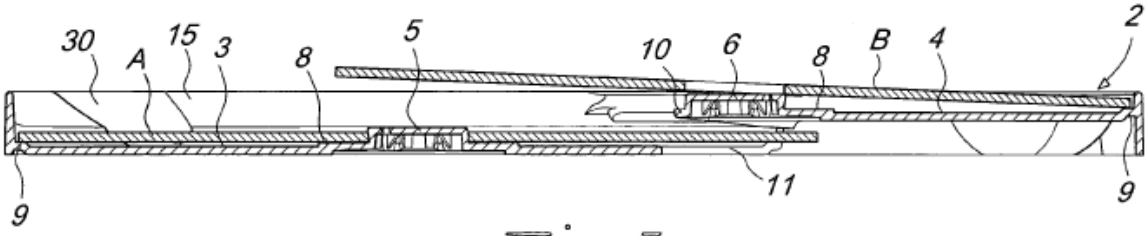

Fig. 7

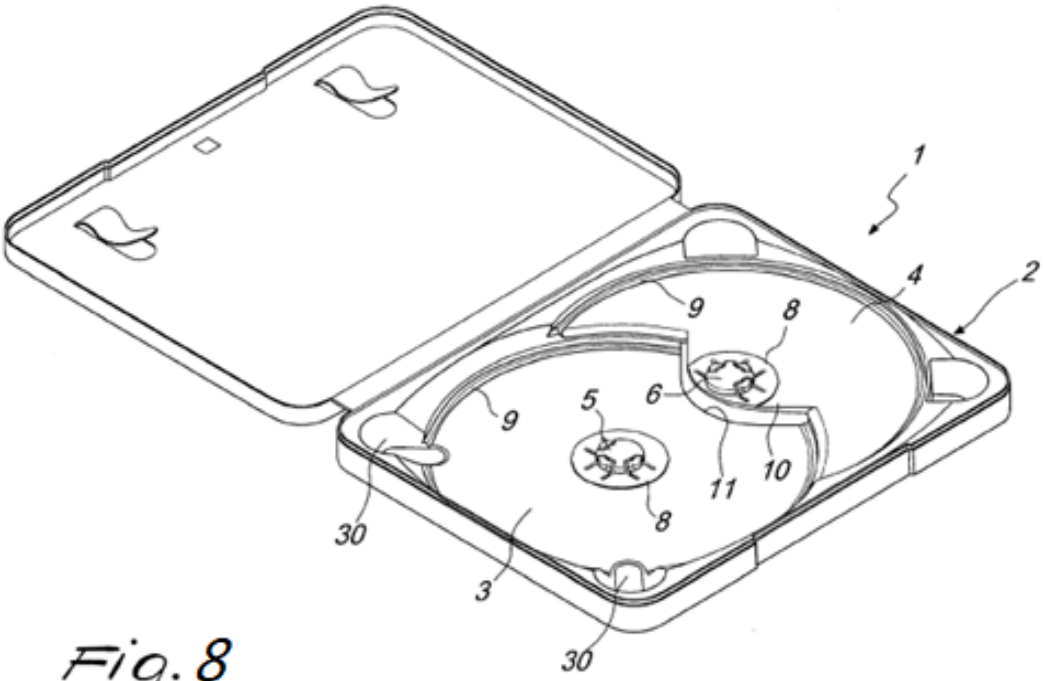

Fig. 8

PAPER C: INFRINGEMENT AND VALIDITY OF SINGAPORE PATENT
24 October 2018, Wednesday
1330 – 1730 hrs

Maximum Time: 4 Hours (includes reading time) Maximum Marks: 100

Document B: Technical Flyer of Double-Up DVD Case (1/4)

Singapore, October 2018

[001] Infringion is pleased to announce the launch of our new product - the Double-Doubly-Up DVD Case, now available at all leading stationery stores! It is simply a box for storing at least one pair of compact discs that has at least one pair of inserts for engaging the central apertures of discs, one insert projecting further than the other so as to retain the discs in spaced, overlapping relationship. A space for receiving a pamphlet may be provided, as may a hook.

Technical information:

[002] Our Double-Doubly-Up DVD case is a storage container (i.e. a box) for storing compact discs comprising a housing adapted to store at least one pair of compact discs, so that when stored therein each compact disc of such a pair is positioned so that it is spaced apart from and overlaps with the other compact disc of that pair, there being a support for each compact disc which comprises a respective projection from the housing and which is to be spiggotted into the central aperture of the disc to support it, one of the two projections for each pair of compact discs projecting further into said housing than the other.

[003] Our Double-Doubly-Up DVD case holds up to 4 compact discs firmly and easily in place without them moving or rubbing against each other by means of 4 inserts.

[004] Our Double-Doubly-Up DVD case is made from polypropylene with a clear polypropylene sleeve on the outside of the box (not shown in the representations) enabling use of presentation leaflets, description, etc.

[005] Our Double-Doubly-Up DVD case is hinged, a special space is provided for pamphlet storage and the box contains a hook used for display purposes.

Document B: Technical Flyer of Double-Up DVD Case (2/4)

[006] Figure 1 illustrates the inside of the box when the box is fully open with inserts (1) and discs (2) in place. The pamphlet holder (3) is in the middle between the two hinges (4). The back is plain, with a clear polypropylene sleeve welded to the outside of the box on the two longer edges of the box (not illustrated).

[007] Figure 2 illustrates the closed view of the box with inserts (1) and discs (2) in place. (5) shows the overlap of the two sides of the box as closed.

[008] Figure 3 illustrates the side view of the single side of the box which contains the hook (6).

[009] Figure 4 illustrates the t/section of the fully opened box showing the pamphlet holder (3) and the 2 hinges (4).

PAPER C: INFRINGEMENT AND VALIDITY OF SINGAPORE PATENT
24 October 2018, Wednesday
1330 – 1730 hrs

Maximum Time: 4 Hours (includes reading time) Maximum Marks: 100

Document B: Technical Flyer of Double-Up DVD Case (3/4)

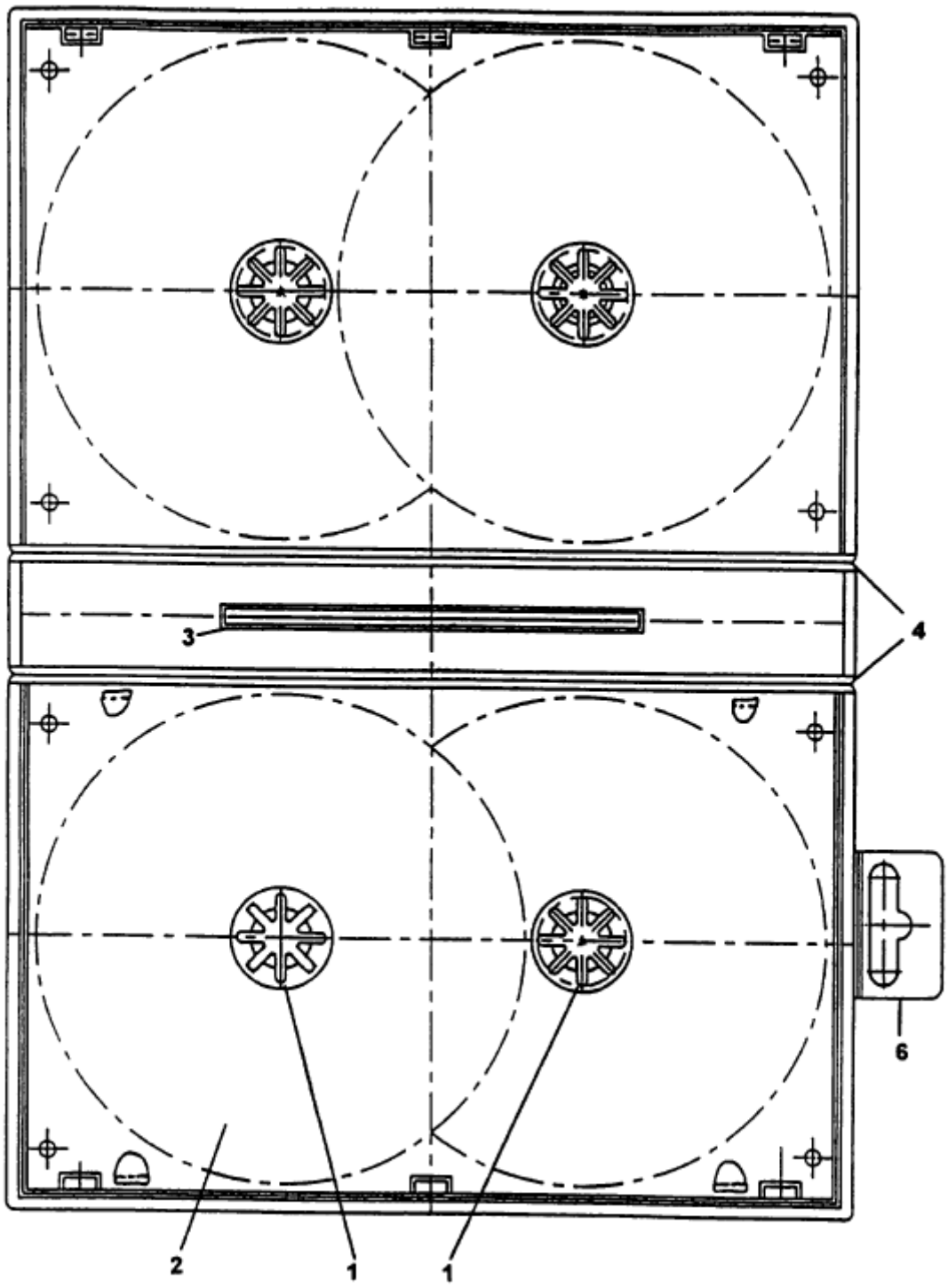

FIGURE 1

PAPER C: INFRINGEMENT AND VALIDITY OF SINGAPORE PATENT
24 October 2018, Wednesday
1330 – 1730 hrs

Maximum Time: 4 Hours (includes reading time) Maximum Marks: 100

Document B: Technical Flyer of Double-Up DVD Case (4/4)

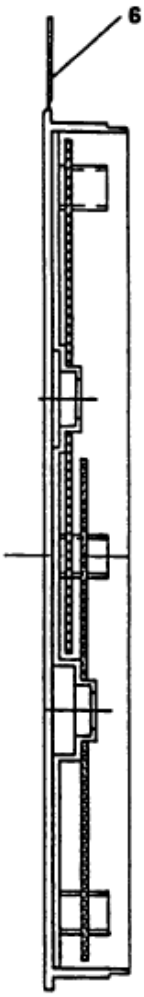

FIGURE 3

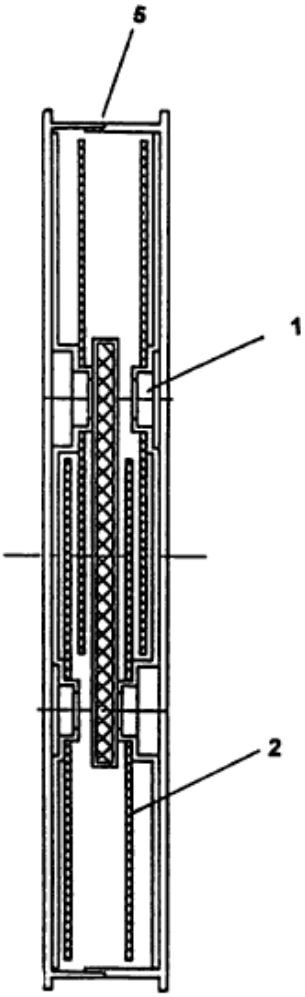

CLOSED VIEW WITH INSERTS
AND DISCS IN PLACE

FIGURE 2

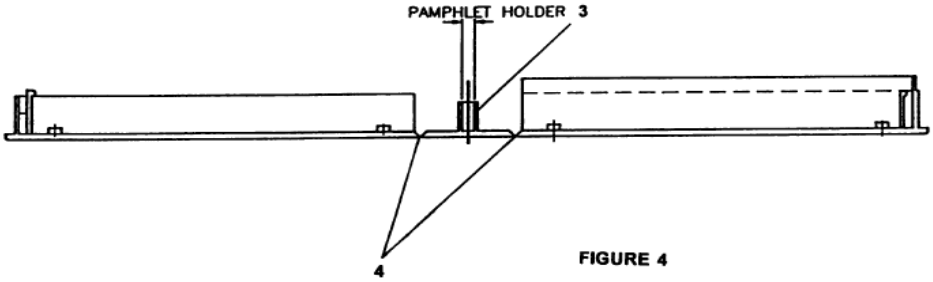

FIGURE 4

PAPER C: INFRINGEMENT AND VALIDITY OF SINGAPORE PATENT
24 October 2018, Wednesday
1330 – 1730 hrs

Maximum Time: 4 Hours (includes reading time) Maximum Marks: 100

Document C: Container for Compact Discs (1/4)

Published in local magazine on 31 October 2017

[001] A container for a plurality of discs, particularly compact discs, is announced herein. The container may also be adapted for use with other types of discs, including both optical discs and mechanical discs.

[002] The container for a plurality of discs accommodates two or more discs and allows them to be removed individually, and to reduce the external dimensions of the container for easier storage.

[003] Figure 1 shows a perspective view, in closed position, of a container for a plurality of discs according to the invention;
Figure 2 shows a perspective view of a container for two discs, shown in open position;
Figure 3 shows a sectional view of the container for two discs.

[004] With reference to Figures 1 to 3, the container 1 for a plurality of discs, particularly for compact discs, according to the invention, comprises an outer case 2 provided with a front flap 3a which is connected, by means of a spine 3b, to a rear flap 3c.

[005] Advantageously, sheets 4, joined in a booklet-like fashion to apply the necessary indications, can be applied onto the inner face of the front flap 3a, whereas a tray-like body 10 is provided on the inner face of the rear flap 3c. The tray-like body 10 is connected to the flap 3c by interposing adhesive material or with other conventional methods. The tray 10 can furthermore be formed monolithically with the flap 3c.

[006] A feature of the container is constituted by the fact, as shown in Figures 2 and 3, that the tray-like body 10 defines a first region 20 for accommodating a first compact disc 21; the region has, in a per se known manner, peripheral recesses 22 that allow to remove the disc 21, which is retained, in a known manner, by a coupling element 23 that acts axially.

Document C: Container for Compact Discs (2/4)

[007] A further feature of the container is constituted by the fact that there is a second region 30 for accommodating a second compact disc 31, the second region 30 being arranged at a higher level than the first region 20.

[008] The second compact disc 31 is furthermore arranged so as to partially overlap the first compact disc 21 and remain spaced therefrom, so that the user can, as shown schematically in dashed lines in Figure 3, remove either disc without difficulty.

[009] The partial overlapping of the discs, while keeping them mutually spaced, allows to significantly reduce the overall size of the container and most of all to reduce its dimension ratio.

[0010] From the above description it is evident that the container achieves the intended aim and objects, and in particular the fact is stressed that with extremely simple constructive solutions, such as the provision of two regions at different levels for accommodating the first and second compact discs, which are partially superimposed and spaced, it is possible to reduce the overall size of the container without thereby compromising in any way the possibility of easily removing the compact discs.

PAPER C: INFRINGEMENT AND VALIDITY OF SINGAPORE PATENT
24 October 2018, Wednesday
1330 – 1730 hrs

Maximum Time: 4 Hours (includes reading time) Maximum Marks: 100

Document C: Container for Compact Discs (3/4)

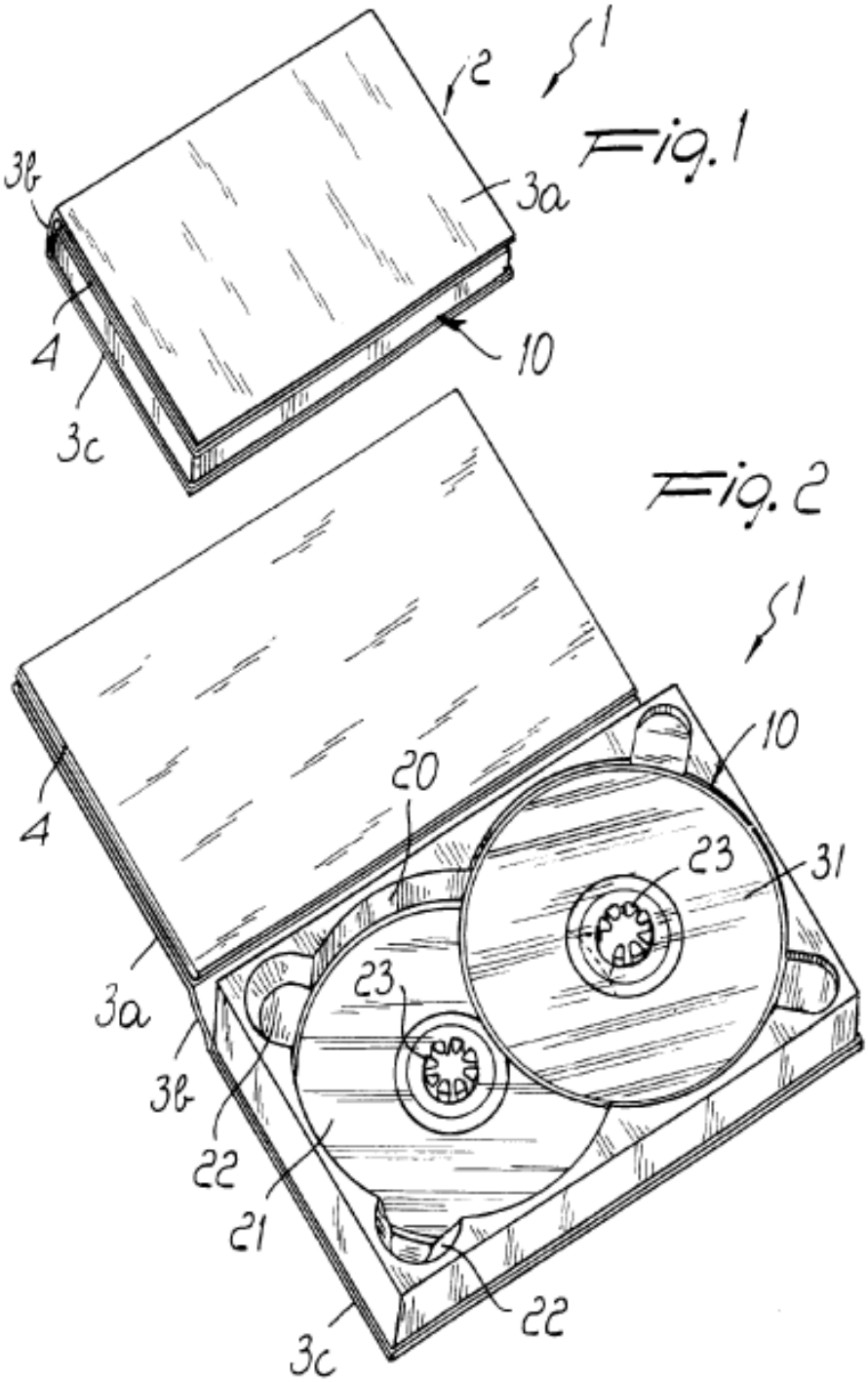

PAPER C: INFRINGEMENT AND VALIDITY OF SINGAPORE PATENT
24 October 2018, Wednesday
1330 – 1730 hrs

Maximum Time: 4 Hours (includes reading time) Maximum Marks: 100

Document C: Container for Compact Discs (4/4)

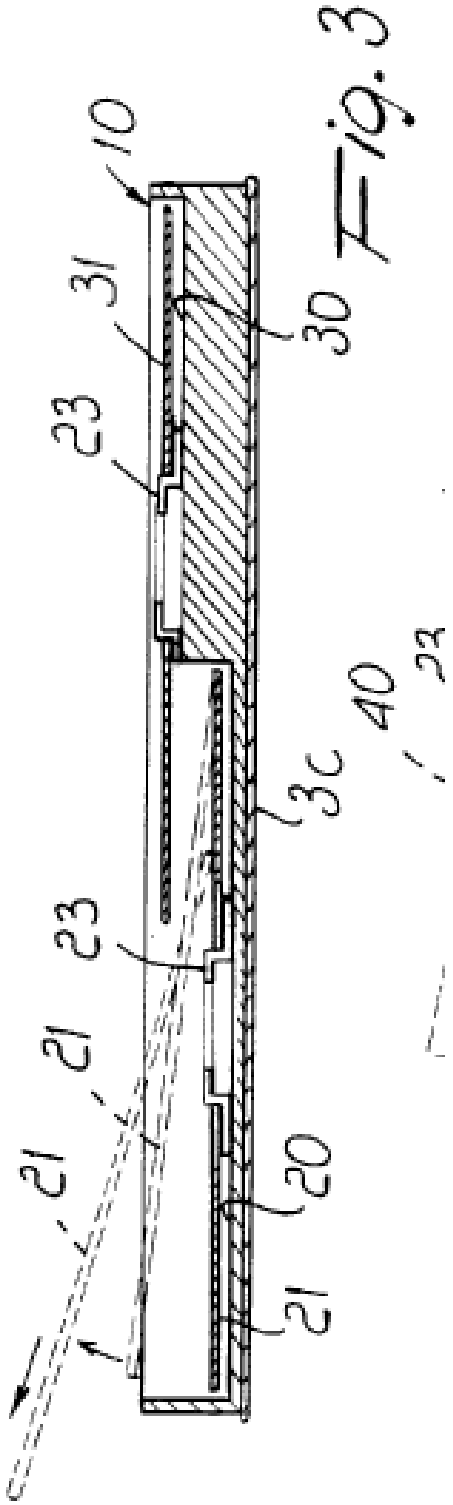

Fig. 3

PAPER C: INFRINGEMENT AND VALIDITY OF SINGAPORE PATENT
24 October 2018, Wednesday
1330 – 1730 hrs

Maximum Time: 4 Hours (includes reading time) Maximum Marks: 100

Document D: SG Patent No. 10201400001X (1/7)

A HOLDER FOR HOLDING OPTICAL DATA STORAGE DISCS

Singapore Patent No. 10201400001X
Grant date: 1 December 2016
Filing date: 14 February 2014
Published on 15 August 2015
Priority claim: None
Status: Lapsed due to non-payment of renewal fee

[001] This invention relates to a holder for holding optical data storage discs ("compact discs"). In particular, the invention relates to a compact disc storage case for two or more compact discs.

[002] Compact discs (CDs) are used as data storage devices in a wide range of applications. In the majority of storage cases the compact disc is retained in position by releasable engagement with a raised hub. Such hubs (also referred to as rosettes or bosses) typically comprise resilient tines arranged to form a generally circular structure having a diameter slightly greater than that of the central aperture of the compact disc. When the aperture of a disc is aligned over the boss and downward pressure applied the tines are urged together to assume a diameter capable of passing through the aperture.

[003] The resilience of the tines then induces them to resume their original conformation, thereby holding the compact disc in place. To effect removal of the disc a downward pressure is applied to the tines, causing their reversion to the reduced diameter configuration, while an upward pressure is applied to the compact disc.

[004] In many situations it is desirable to provide two or more compact discs in a single case. This may be due to the total amount of data required being more than can be stored on a single disc or to increases in value that may be imparted by the provision of other discs (such as packaging of a sound track or similar disc with copies of a film).

Document D: SG Patent No. 10201400001X (2/7)

[005] According to a first aspect of the present invention there is provided a holder for at least two compact discs according to claim 1.

[006] The invention allows the two discs to be mounted very close together without interfering with operation of the disc engaging formations. For instance, with the present invention two DVDs can be mounted to the same side of a conventionally sized DVD case.

[007] In preferred embodiments said support structure is discontinuous around the second hub, said discontinuity providing said region of reduced radial extent. For instance, the support structure may comprise a land which extends partially around the second hub.

[008] The hubs may be so close together that the edge of one disc lies adjacent the periphery of the central aperture of the other disc and vice versa. Each hub may even be provided with a cut-away portion so that the edge of each disc can extend beyond the periphery of the central aperture of the other disc.

[009] A specific embodiment of the present invention will now be described, by way of example only, with reference to the accompanying drawings, in which:
Figure 1 is a plan view of an open DVD case according to the present invention;
Figure 2 shows the DVD case of Figure 1 with compact discs (DVDs) in position; and
Figure 3 is a schematic cross-section through part of the case of Figure 1.

[0010] Referring first to figure 1 the illustrated case (generally indicated as 1) comprises a base 2 and lid 3, joined by a pair of living hinges 4. When the case 1 is closed lid 3 overlies base 2. Lid 3 and base 2 are provided with conventional interlocking snap fittings 5 able to hold case 1 closed. In this example the case has the industry accepted dimensions of a standard DVD case.

Document D: SG Patent No. 10201400001X (3/7)

[0011] The base 2 of case 1 is provided with first and second disc-engaging hubs 6 and 7, which extend upwardly from bosses 8 and 9 respectively, arranged to support the discs in an overlapping manner. The bosses 8, 9 support a non-data encoding portion of the surface of a held disc to ensure that the data surface of the disc is kept from contact with the surface of base 2. Peripheral support ledges 10 support respective portions of the edges of engaged discs, again to hold them away from the surface of base 2. The boss 9, and associated support ledge 10 are raised above the base 2 to a greater extent than boss 8 and its associated support ledges 10. This ensures that with two discs 12 and 13 in situ (see Figures 2 and 3) the overlapping portions of the discs 12 and 13 do not contact, thereby avoiding damage to the data carrying portions regions of discs 12 and 13.

[0012] The lid 3 of case 1 is provided with integrally molded clips 11 to retain printed material such as information booklets or the like, as is conventional. In accordance with the present invention boss 9 has a "cut-away" configuration in region 9a, when compared with boss 8 which is continuous around hub 6. The hubs 6 and 7 are similarly partially "cut-away". This arrangement allows the two hubs 6 and 7 to be positioned as close as is possible to each other without interfering with their operation. Thus, referring to Figures 2 and 3, it can be seen that the edge of disc 12 extends into the cut-away portion of boss 9 and hub 7 whilst the edge of disc 13, which partially overlaps disc 12, extends into the cut-away portion of hub 6. The discs 12 and 13 are thereby able to overlap each other to a greater extent than is possible, allowing two discs to be mounted on the same side of a conventional DVD case as illustrated. A further adaptation that enables discs 12 and 13 to be overlapped within a reduced area of base 2 can be seen in the off-setting of the two hubs 6 and 7 relative to an imaginary center line through base 2.

PAPER C: INFRINGEMENT AND VALIDITY OF SINGAPORE PATENT
24 October 2018, Wednesday
1330 – 1730 hrs

Maximum Time: 4 Hours (includes reading time) Maximum Marks: 100

Document D: SG Patent No. 10201400001X (4/7)

CLAIMS

1. A holder for at least two compact discs (12, 13) each having a central aperture surrounded by a central annular non-data carrying region, the holder comprising:

a surface;
first and second spaced apart disc (12, 13) engaging formations extending from said surface to support first and second compact discs (12, 13) respectively in a partially overlapping arrangement;
the first disc engaging formation comprising a first hub (6) which in use is received within the central aperture of the first disc (12);
the second disc engaging formation comprising a second hub (7) which in use is received within the central aperture of the second disc (13), and a support structure adjacent the hub which in use supports the central non-data carrying portion of the second disc away from the surface and above the first disc so that the two discs (12, 13) do not contact one another in the region of their overlap;

characterized in that said support structure has a reduced radial extent relative to the center of the second hub (7) in a region opposing the first hub (6), and the first (6) and second (7) hubs are spaced such that in use the edge of one disc overlaps part of the central non-data carrying region of the other disc, said region of reduced radial extent of said support structure accommodating the proximity of the edge of the first disc (12) to the second hub (7), and further characterized in that each hub (6, 7) is provided with a cut-away portion so that the edge of each disc (12, 13) can extend beyond the periphery of the central aperture of the other disc (12, 13).

PAPER C: INFRINGEMENT AND VALIDITY OF SINGAPORE PATENT
24 October 2018, Wednesday
1330 – 1730 hrs

Maximum Time: 4 Hours (includes reading time) Maximum Marks: 100

Document D: SG Patent No. 10201400001X (5/7)

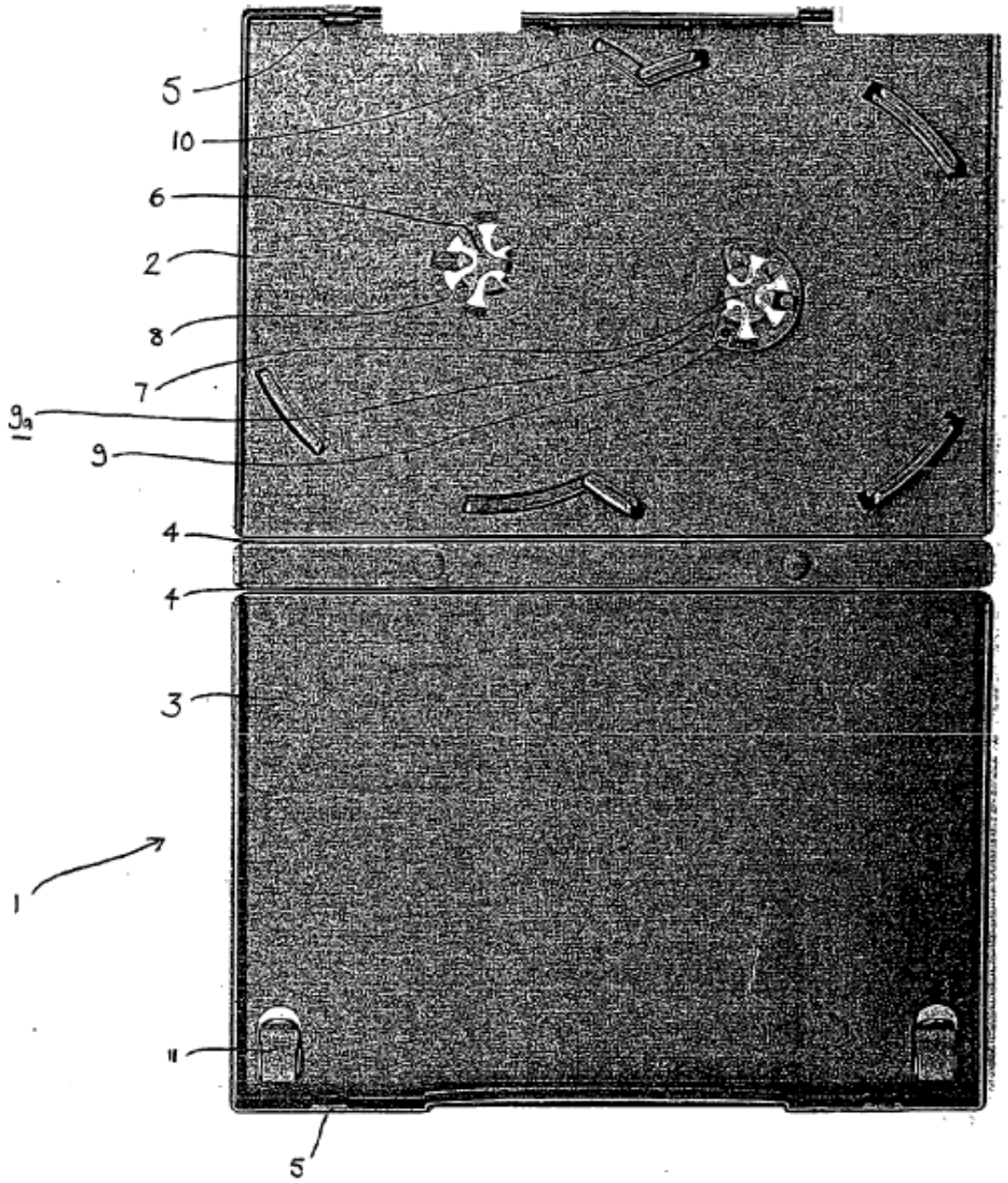

Figure 1

PAPER C: INFRINGEMENT AND VALIDITY OF SINGAPORE PATENT
24 October 2018, Wednesday
1330 – 1730 hrs

Maximum Time: 4 Hours (includes reading time) Maximum Marks: 100

Document D: SG Patent No. 10201400001X (6/7)

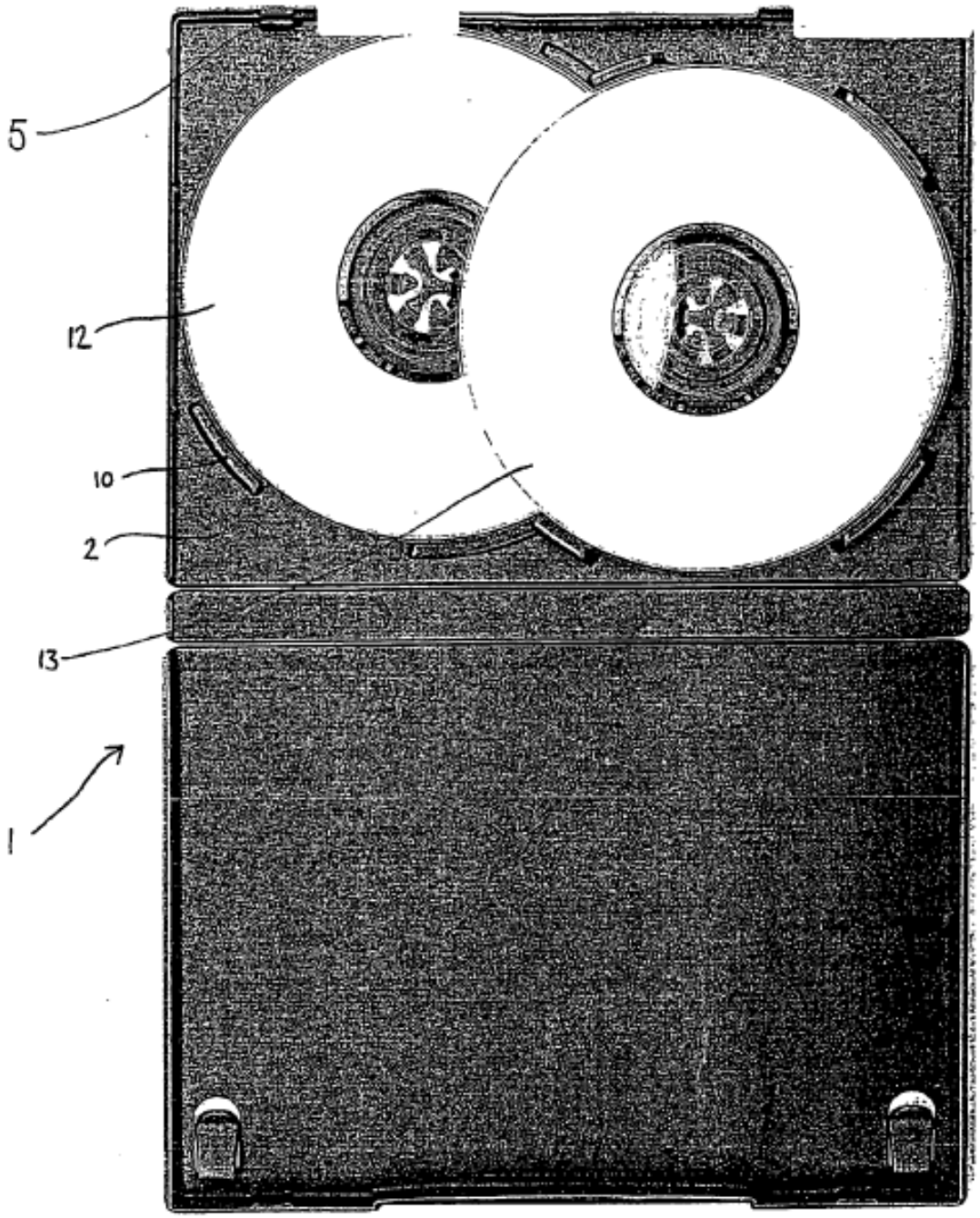

Figure 2.

PAPER C: INFRINGEMENT AND VALIDITY OF SINGAPORE PATENT
24 October 2018, Wednesday
1330 – 1730 hrs

Maximum Time: 4 Hours (includes reading time) Maximum Marks: 100

Document D: SG Patent No. 10201400001X (7/7)

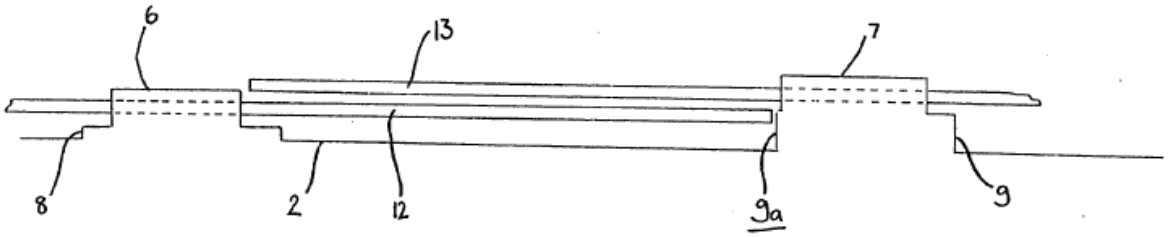

figure 3.

END