INTELLECTUAL PROPERTY OFFICE OF SINGAPORE
PATENT AGENTS QUALIFYING EXAMINATION 2017

PAPER B: AMENDMENT OF A PATENT SPECIFICATION
25 October 2017, Wednesday
1330 – 1730 hrs

Maximum Time: 4 Hours (includes reading time) Maximum Marks: 100

INTELLECTUAL PROPERTY OFFICE OF SINGAPORE

INSTRUCTIONS TO CANDIDATES

1. This Paper consists of 34 pages, including this cover page and 2 blank pages.

2. Type/Write your answers in English. Answers in any other language will not be marked. For candidates who opted out from laptop examination: Answers in illegible handwriting will not be taken into consideration.

3. One hardcopy of the question paper is provided, for your reading and for your use (optional) when answering the question(s) in the Answer Script/Answer Booklet(s). For candidates who opted out from laptop examination: You are given two hardcopies of the question paper.

4. Only your answers and/or drawings to the question(s) typed/written or indicated/glued in the Answer Script/Answer Booklet(s) provided by the Examination Secretariat will be considered. Candidates should not change the format of the Answer Script or type in the margin. For candidates who opted out from laptop examination: You are to write on one side of each sheet in the Answer Booklet(s).

5. Information provided in the question(s) may be obtained from actual situations or modified therefrom for the purpose of this examination. You should accept the facts given in the Paper. Assume also that the prior art given is exhaustive.

6. For the purpose of this Paper you do not need to propose any amendments to the description of the Patent Application.

To be continued

PAPER B: AMENDMENT OF A PATENT SPECIFICATION
25 October 2017, Wednesday
1330 – 1730 hrs

Maximum Time: 4 Hours (includes reading time) Maximum Marks: 100

7. The documents provided in this question are:

   a. Document A: A Wound Dressing Material and a Method for Manufacture (14 pages);
   b. Document B: Written Opinion (1 page);
   c. Document C: Client's Letter (2 pages);
   d. Document D1: EP3333333 A1 (8 pages);
   e. Document D2: US4444444 (3 pages);and
   f. Document D3: Pamphlet downloaded from Singapore website www.patchesandall.com.sg (2 pages).

End

PAPER B: AMENDMENT OF A PATENT SPECIFICATION
25 October 2017, Wednesday
1330 – 1730 hrs

Maximum Time: 4 Hours (includes reading time) Maximum Marks: 100

Document A: A Wound Dressing Material and a Method for Manufacture (1/14)

Cross-reference to Related Application

[01] This application claims priority to Singapore patent application number 10201411111A filed on 6 January 2014 in the name of BestWound Pte Ltd, which in turn, claims priority to Singapore patent application number 10201322222B, filed on 2 September 2013 in the name of BestWound Pte Ltd. The descriptions of the above applications (which do not have claims) are the same as the present application and are hereby incorporated herein by reference.

Technical Field

[02] This application relates to frame delivered adhesive composite dressings comprising a backing coated on one side with a pressure sensitive adhesive. This application also relates to a method of manufacturing such frame delivered adhesive composite dressings.

Background

[03] Transparent film dressings are widely used as protective layers over wounds because they facilitate healing in a moist environment while acting as a barrier to contaminating liquids and bacteria. The films are also used as surgical dressings because of their barrier properties.

[04] The polymeric material used in the above film dressings and surgical dressings are conformable, that is, the polymeric material are extremely thin, flexible, supple and do not interfere with the movement of the body part or joint that the dressing is applied onto. They are typically supplied with a releasable protective liner covering the adhesive coated surface of the polymeric material. When the liner is removed, the adhesive coated polymeric material tends to wrinkle and adhere to itself, interfering with the smooth, aseptic application of the dressing to a patient's skin. Various delivery systems have been proposed to address this problem.

[05] One known delivery system provides a dressing attached to a release liner by the use of adhesive between the dressing and the liner. The liner material functions as

a frame to provide support during placement of the dressing after a center section of the release liner has been removed. After the dressing has been affixed, the frame is removed from the dressing by tearing the film along the perforations provided around the center section. As the center section functions as a liner, however, it cannot be removed until immediately before the dressing is placed on a patient. Furthermore, as the frame must be torn from the perimeter of the dressing, the adhesive bond between the skin and the dressing is often disturbed, which can then lead to premature failure and removal of the dressing when the patient moves around, leading to the dressing being stuck onto bed linens. When this dressing is re-applied onto the patient, the adhesive is not strong enough to allow for re-sticking of the dressing and a new dressing will have to be used.

[06] This application provides for a wound dressing material that is able to overcome or ameliorate the problems mentioned above. There is also provided a method of manufacturing a wound dressing material.

Summary

[07] The adhesive composite dressing of the present application (and methods of manufacturing the same) addresses the above problems by providing a frame delivered dressing having a conformable backing with a pressure sensitive adhesive coated on a bottom face, which in turn has a release liner thereon; an optional low adhesion coating on a top face, and which is supported by a releasable frame attached to the top face of the backing. The adhesive composite dressing can be for use as a wound dressing or patch.

[08] The present application is illustrated by the following figures.

Document A: A Wound Dressing Material and a Method for Manufacture (3/14)

Brief Description of the Figures

[09] Figure 1 is a top perspective view of one preferred embodiment of a dressing according to the present application.

[010] Figure 2A is a top perspective view of an alternate embodiment of a dressing according to the present application.

[011] Figure 2B is a bottom perspective view of the dressing of Figure 2A with the liner removed.

[012] Figure 3 is a top perspective view in partial cross-section of another alternate embodiment of a dressing of the present application.

[013] Figure 4 is a flow chart of a method to manufacture a dressing of the present application.

Detailed Description of Figures

[014] Figures 1 to 3 depict preferred and alternate embodiments of dressings manufactured according to the present application. The adhesive composite dressings are useful in connection with any conformable backing having a pressure-sensitive adhesive coating onto it. Representative backings include nonwoven fibrous webs, woven fibrous webs, knits and other typical backing materials. The backing material is typically waterproof. The preferred backing materials are translucent or transparent polymeric films. The backing is able to allow vapour to pass through, to be transmitted away from the wound.

[015] The pressure sensitive adhesives which can be used in the adhesive composite dressing are the normal adhesives which are applied to a skin such as Polymer A or Polymer B. The pressure sensitive adhesive is able to allow vapour to pass through, to be transmitted away from the wound.

Document A: A Wound Dressing Material and a Method for Manufacture (4/14)

[016] The release liner of the adhesive composite dressing can be made of kraft papers, Polymer C, or Polymer D. The release liner can be further coated for easy removal from the adhesive composite dressing.

[017] The frame of the adhesive composite dressing is made from a carrier material that is preferably substantially more rigid than the backing to provide rigidity to the adhesive composite dressing so as to prevent the backing from wrinkling during use. The carrier material is also heat-sealable to the backing, with or without the low adhesion coating, for the purpose of manufacturing the dressings depicted in Figures 1 to 3. In general, the carrier material can include, but are not limited to, Polymer E, Polymer F or Polymer G. The frame may be patterned with colourful designs or cartoon characters for aesthetic purposes, which are appealing to children.

[018] Where the low adhesion coating is present in the adhesive composite dressing, the low adhesion coating is coated on a top face of the backing. Advantageously, the low adhesion coating is compatible with the heat seal bond between the carrier material and the backing and can still retain its low adhesion characteristics after heat sealing. The heat seal bond forms a bond between the carrier material, the low adhesion coating and the backing. The low adhesion coating can be made from Polymer H or Polymer I and is also able to allow vapour to pass through, to be transmitted away from the wound.

[019] The adhesive composite dressing can be of any shape (round, rectangular, square, oblong, etc) such that the shape is not a limiting feature of the adhesive composite dressing.

[020] Figure 1 shows an adhesive composite dressing 10 which comprises a conformable backing 14, a low adhesion coating 13 on a top face of the backing 14, a frame 12 made of a carrier material attached to the top face of the backing 14 over the low adhesion coating 13, a pressure-sensitive adhesive 16 layer and a release liner 18 attached to the exposed surface of the pressure-sensitive adhesive 16. When the

adhesive composite dressing 10 is formed together, the pressure-sensitive adhesive 16 layer will be disposed at the bottom face of the backing 14.

[021] The frame 12 is attached to the backing 14 (over the low adhesion coating 13) with a heat seal bond. Frame 12 provides rigidity to the backing 14 after the release liner 18 is removed and has an opening proximate the center forming a window 15 which exposes a portion of the top face of the backing 14. As described above, the low adhesion coating 13 is compatible with the heat seal bond between the frame 12 and backing 14.

[022] Release liner 18 and frame 12 both preferably include tabs 17 and 19 which extend beyond the perimeter of backing 14 to provide a means of applying the backing/frame/adhesive composite without contacting the pressure-sensitive adhesive 16.

[023] The heat seal bond between the frame 12 and the backing 14 is stronger than the bond between the pressure-sensitive adhesive 16 and the release liner 18. Advantageously, this ensures that the backing 14 remains attached to the frame 12 when release liner 18 is removed from the adhesive composite dressing 10. This prevents splitting of the frame 12 from the backing 14 when the release liner 18 is removed before applying the adhesive composite dressing 10 to the patient.

[024] In use, the release liner 18 is first removed from the adhesive composite dressing 10 leaving the frame 12/backing 14/pressure-sensitive adhesive 16 intact. The user can then manipulate the adhesive composite dressing 10 using tabs 17 on the frame 12 while viewing the area to which the adhesive composite dressing 10 will be attached through window 15 as the backing 14 is transparent or translucent.

[025] The low adhesion coating 13 on the backing 14 also reduces dressing changes due to unwanted dressing removal when other tapes or devices are placed on the adhesive composite dressing 10 and removed. The low adhesion coating 13 also

reduces the surface friction of the adhesive composite dressing 10 on linen or other fabrics, thereby offering additional protection against the accidental removal of the adhesive composite dressing 10.

[026] Turning to Figures 2A and 2B, there is shown an adhesive composite dressing 21 comprising a frame 22, a low adhesion coating 23, a backing 24, a pressure-sensitive adhesive coating 26 and a release liner 28. Release liner 28 has opposing tabs 29 for handling and frame 22 also includes tabs 27 for handling. Adhesive composite dressing 21 also includes an open area or window 25 in frame 22 which exposes a portion of the top surface of backing 24 and extends around the entire perimeter of backing 24.

[027] The frame 22 is attached to the backing 24 (over the low adhesion coating 23) with a heat seal bond. The heat seal bond is stronger than the bond between the pressure-sensitive adhesive coating 26 and the release liner 28, advantageously allowing the backing 24 to remain attached to the frame 22 when release liner 28 is removed from the adhesive composite dressing 21. Frame 22 provides rigidity to the backing 24 after the release liner 28 is removed and has an opening proximate the center forming a window 25 which exposes a portion of the top face of the backing 24. As described above, the low adhesion coating 23 is compatible with the heat seal bond between the frame 22 and backing 24.

[028] Figure 2B is the bottom view of adhesive composite dressing 21 with release liner 28 removed to expose the pressure-sensitive adhesive coating 26 and an absorbent pad 29 disposed on the pressure sensitive adhesive coating 26 on a bottom face of the backing 24. The absorbent pad 29 is made of absorbent materials, can be of any convenient shape, at any location on the adhesive composite dressing 21 except the frame, and can be used to advantageously contain a number of substances, such as antibacterial agents, antibiotics, medicinal drugs, etc.

Document A: A Wound Dressing Material and a Method for Manufacture (7/14)

[029] The presence of the window 25 in the frame 22 helps to prevent the absorbent pad 29 from deforming the backing 24, to prevent the splitting of the frame 22 from the backing 24.

[030] Figure 3 shows an adhesive composite dressing 30 with a frame 32, backing 34, pressure-sensitive adhesive 36 and release liner 38. The frame 32 is located around the perimeter of the backing 34 and provides a window 35 that exposes a portion of the top face of the backing 34. This type of dressing is useful for allergy testing as a patch testing system with a plurality of holes 37 that advantageously allow for the placement of allergens on a patient's skin for determining whether an allergic reaction to that particular allergen occurs. The plurality of holes 37 can thus be viewed and accessed via the window 35.

[031] Figure 4 is a flow chart showing how to make one embodiment of the adhesive composite dressing of the present application. As shown, step 40 provides an adhesive composite formed of a backing/pressure sensitive adhesive/release liner. The backing/pressure sensitive adhesive/release liner layers are formed by compression moulding. Step 42 is optional and coats a low adhesion coating on the top face of the backing. Step 44 deposits the carrier material onto the backing, which is then cut to form the window which lies proximate the center of the frames of the dressings in Figures 1 to 3. The cutting is accomplished using standard cutting equipment which is known to those skilled in the art. The depth of the cut is controlled so that the backing (or the low adhesion coating when present) is not cut. Step 46 is a removing step to remove the window once identified in cutting step 44. The window is removed using standard methods to those known in the art. Step 48 bonds the carrier material to the top face of the backing, and if the low adhesion coating is present, over the low adhesion coating, thus forming the frame. Any bonding method (such as adhesive) can be used here as long as the frame is bonded to the backing and the frame can be released from the backing during use. The bonding step may be a heat sealing step carried out using a heated roll or a hot press at a temperature in the range of about 50°C to about 150°C. Forming the heat seal bond at this temperature allows for the

frame to be releasable from the backing when required to allow other injection devices, intravenous drip needles or catheters to be adhered or applied directly onto the backing (with or without the low adhesion coating).

[032] Thus, the adhesive composite dressing not only acts as a wound barrier material but also allow for the treatment of the wound when the dressing is in place. Steps 42, 44 and 46 can be performed simultaneously or sequentially. Step 50 then either fixes an absorbent pad onto the pressure sensitive adhesive coating or forms holes into the adhesive composite dressing. The final adhesive composite dressing is then sterilized and packaged for final sale.

Industrial Applicability

[033] The adhesive composite dressings of the present application can be used to cover wounds without having to re-apply the dressing or to replace the dressing. The adhesive composite dressings can be used to administer drugs or to adhere to external devices that can help to heal or treat the wound while the dressing is in contact with the wound. The adhesive composite dressings can also be used as an allergy testing system.

[034] The scope of the present application is defined in the appended claims.

PAPER B: AMENDMENT OF A PATENT SPECIFICATION
25 October 2017, Wednesday
1330 – 1730 hrs

Maximum Time: 4 Hours (includes reading time) Maximum Marks: 100

Document A: A Wound Dressing Material and a Method for Manufacture (9/14)

Claims

1. An adhesive composite dressing for use as a wound dressing or patch comprising:
   a. a conformable backing having top and bottom faces;
   b. a low adhesion coating on at least a portion of the top face of the backing;
   c. a pressure sensitive adhesive coated on at least a portion of the bottom face of the backing;
   d. a release liner adhered to the pressure sensitive adhesive opposite the backing; and
   e. the frame attached to and covering a portion of the top face of the low adhesion coating and backing, the frame being formed of a material that is substantially more rigid than the backing to provide rigidity to the adhesive composite dressing.

2. The adhesive composite dressing of claim 1, further comprising an absorbent pad disposed on top of the frame.

3. The adhesive composite dressing of claim 2, wherein a conformable backing comprises a transparent or translucent material.

4. The adhesive composite dressing of any one of the preceding claims, wherein the backing and pressure sensitive adhesive coating allow vapour to pass through.

5. The adhesive composite dressing of any one of the preceding claims, wherein the frame is attached via a bond.

6. The adhesive composite dressing of claim 1, wherein the absorbent pad comprises antibacterial agents, antibiotics or medicinal drugs.

PAPER B: AMENDMENT OF A PATENT SPECIFICATION
25 October 2017, Wednesday
1330 – 1730 hrs

Maximum Time: 4 Hours (includes reading time) Maximum Marks: 100

Document A: A Wound Dressing Material and a Method for Manufacture (10/14)

7. A method of manufacturing an adhesive composite dressing, comprising the steps of:
   a. providing a conformable backing having top and bottom faces, a pressure sensitive adhesive on at least a portion of the bottom face of the backing and a release liner adhered to the pressure sensitive adhesive; and
   b. depositing a carrier material onto a portion of the bottom face of the backing to form a frame,

   wherein a carrier material is substantially more rigid than the backing to provide rigidity to the adhesive composite dressing.

8. The method of any one of the preceding claims, wherein step b comprises the step of forming an absorbent pad.

9. The adhesive composite dressing of claim 7, wherein the conformable backing comprises a transparent or translucent material.

10. The method of any one of claims 5 to 9, wherein the backing and pressure sensitive adhesive coating allow vapour to pass through.

11. The method of any one of the preceding claims, further comprising the step of attaching the frame via a bond.

12. The method of any one of claims 7 to 11, wherein the absorbent pad comprises antibacterial agents, antibiotics or medicinal drugs.

13. The method of any one of claims 5 to 12, further comprising the step of coating a low adhesion coating on the at least a portion of the top face of the backing.

14. The method of any one of claims 5 to 13, further comprising the step of forming a plurality of holes in the adhesive composite dressing.

PAPER B: AMENDMENT OF A PATENT SPECIFICATION
25 October 2017, Wednesday
1330 – 1730 hrs

Maximum Time: 4 Hours (includes reading time) Maximum Marks: 100

Document A: A Wound Dressing Material and a Method for Manufacture (11/14)

15. An adhesive composite dressing for use as a wound dressing or patch comprising:
    a. a conformable backing having top and bottom faces;
    b. a pressure sensitive adhesive coated on at least a portion of the bottom face of the backing;
    c. a release liner adhered to the pressure sensitive adhesive opposite the backing; and
    d. the frame attached to and covering a portion of the top face of the low adhesion coating and backing, the frame being formed of a material that is substantially more rigid than the backing to provide rigidity to the adhesive composite dressing.

16. An adhesive composite dressing according to any one of the preceding claims, further comprising a plurality of holes.

PAPER B: AMENDMENT OF A PATENT SPECIFICATION
25 October 2017, Wednesday
1330 – 1730 hrs

Maximum Time: 4 Hours (includes reading time) Maximum Marks: 100

Document A: A Wound Dressing Material and a Method for Manufacture (12/14)

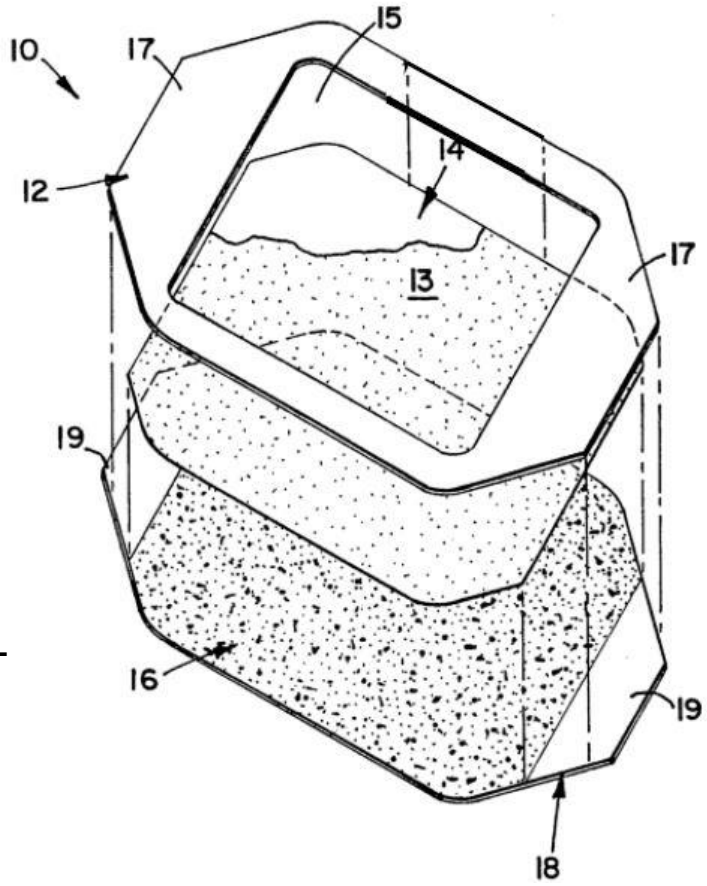

Figure 1

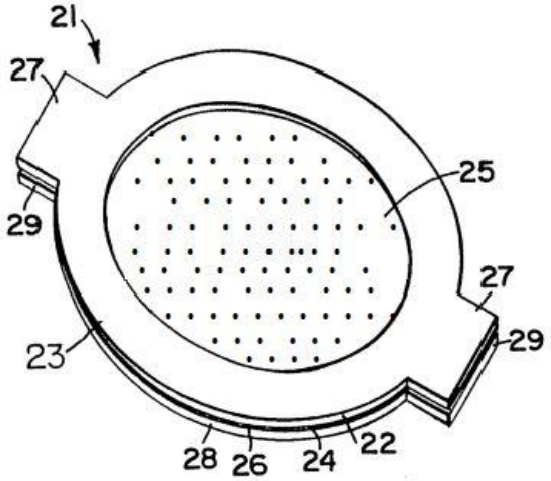

Figure 2A

PAPER B: AMENDMENT OF A PATENT SPECIFICATION
25 October 2017, Wednesday
1330 – 1730 hrs

Maximum Time: 4 Hours (includes reading time) Maximum Marks: 100

Document A: A Wound Dressing Material and a Method for Manufacture (13/14)

Figure 2B

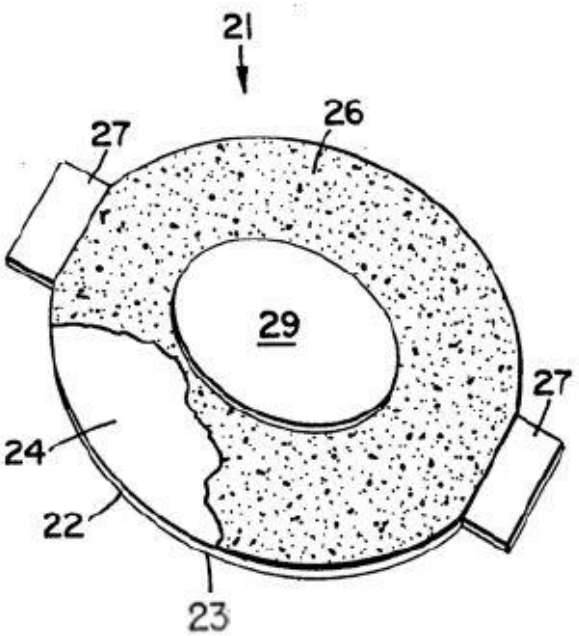

Figure 3

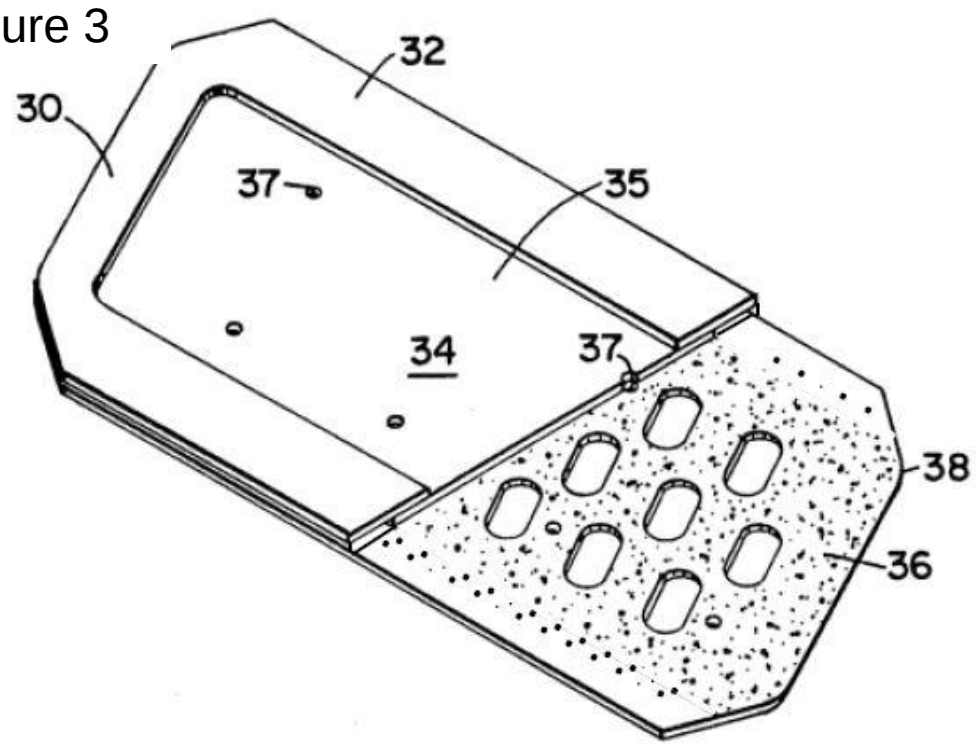

Document A: A Wound Dressing Material and a Method for Manufacture (14/14)

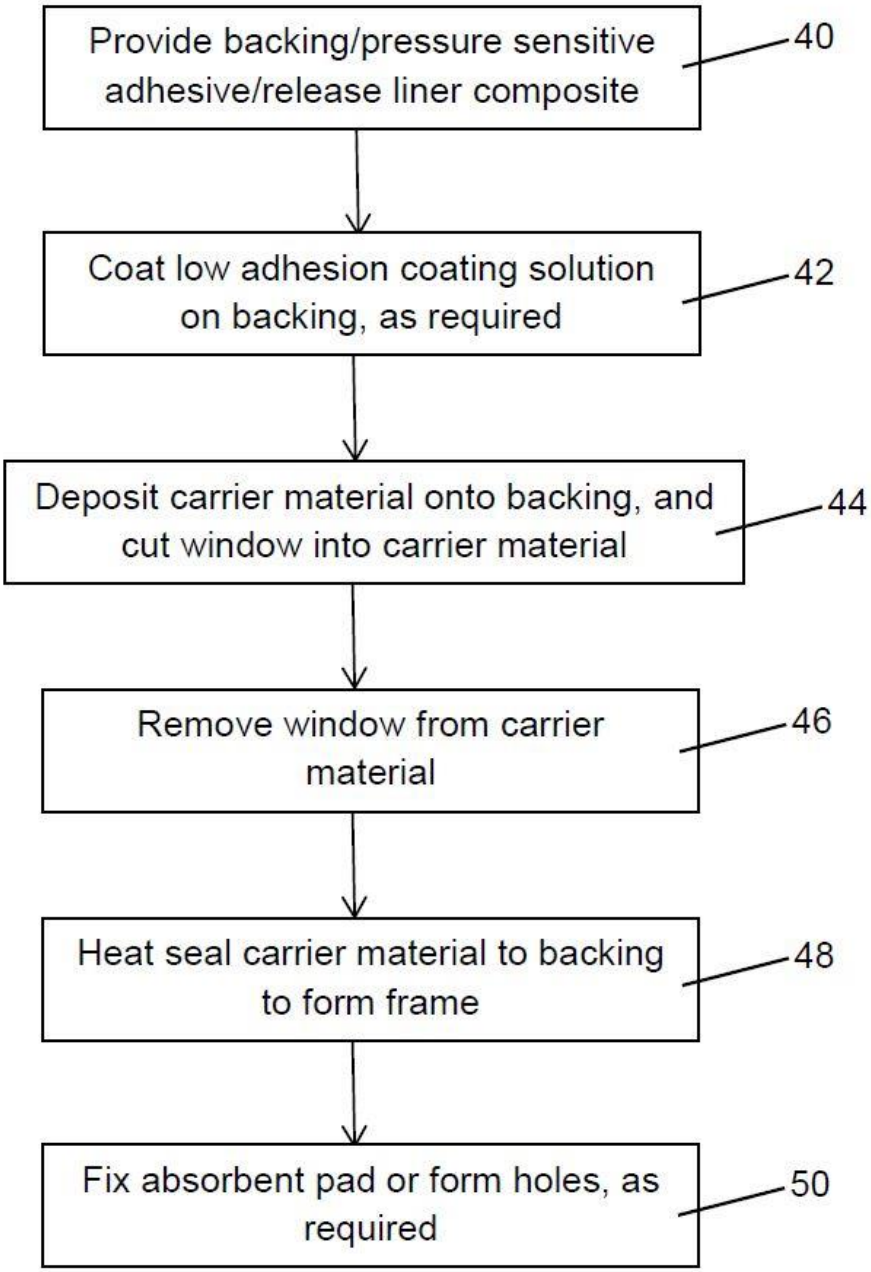

Figure 4

PAPER B: AMENDMENT OF A PATENT SPECIFICATION
25 October 2017, Wednesday
1330 – 1730 hrs

Maximum Time: 4 Hours (includes reading time) Maximum Marks: 100

Document B: Written Opinion (1/1)

Priority date: 6 January 2014 Filing date: 6 January 2015

Request for search and examination filed: 6 January 2017

Written opinion date: 30 May 2017

Name of Examiner: Mr. Newbie

Novelty:	Yes: None
	No: Claims 1 to 16
Inventive Step:	Yes: None
	No: Claims 1 to 16
Industrial Applicability	Yes: Claims 1 to 16
	No: None

Prior art documents:

D1: EP3333333 A1, published on 1 June 2012

D2: US4444444, published on 1 March 1996

D3: Pamphlet downloaded from Singapore website www.patchesandall.com.sg, date on pamphlet 20 August 2014

Novelty: - Prior art documents D1 to D3 disclose the features of claim 1, that is an adhesive composite dressing for use as a wound dressing or patch comprising (a) a conformable backing having top and bottom faces; (b) a low adhesion coating on at least a portion of the top face of the backing; (c) a pressure sensitive adhesive coated on at least a portion of the bottom face of the backing; (d) a release liner adhered to the pressure sensitive adhesive opposite the backing; and (e) frame attached to and covering a portion of the top face of the low adhesion coating and backing, the frame being formed of a material that is substantially more rigid than the backing to provide rigidity to the adhesive composite dressing. Hence, claim 1 lacks novelty in view of D1 to D3. Since claim 1 is not novel, claims 2 to 16 are also not novel.

Inventive Step: - As the claims lack novelty, the claims also lack inventive step.

Clarity: - Some of the claims also lack clarity and antecedence.

THIS IS A BLANK PAGE

PAPER B: AMENDMENT OF A PATENT SPECIFICATION
25 October 2017, Wednesday
1330 – 1730 hrs

Maximum Time: 4 Hours (includes reading time) Maximum Marks: 100

Document C: Client's Letter (1/2)

I received the attached written opinion and I do not understand the objections in the written opinion. Can you explain what the written opinion is for and why my claims are rejected? I think the Examiner may be wrong because some of the claims should be patentable. In addition, I do not know why the third document is relevant since it only came out after I filed my application and in any case, it is a bag patch, and is not used for wound dressings. Do you know why? I see from the cover letter accompanying the written opinion that I need to file a response, when should I respond? Can you prepare the documents for the response and explain your reasoning? As I do not have time, I do not need to know about alternative claim amendments.

For my inventive wound dressing, the frame is the important part due to how it is made. This application was drafted in-house and was the first application that my company filed. Along the way, we have filed more applications and I find that it would be better to keep the claims more concise by just having two independent claims - one to the wound dressing and the other to the method. Can you re-draft the claims for me in one application without incurring excess claims fees?

The various types of wound dressings depicted in this application are very commercially successful, especially that of Figure 1 which is sold in the market with a pattern of cartoon characters on the frame. Since this type of patterned wound dressing is very popular with children, I want to ensure that my competitors do not sell this type of patterned wound dressing. I want to add the pattern of cartoon characters to the present claims as the cartoon character patterns are very aesthetic and visually appealing. Other than that, the patterns have no use or effect. I recently realised that my competitor, Wounds-To-Go Pte Ltd, had launched their new wound dressings early this year that are quite similar to my wound dressings of Figure 1 with cartoon character patterns on it. Hence, I will need to enforce my patent application with the cartoon character patterns against my competitor. Please ensure that this is covered as I would like to start infringement proceedings against my competitor within this week or the next.

PAPER B: AMENDMENT OF A PATENT SPECIFICATION
25 October 2017, Wednesday
1330 – 1730 hrs

Maximum Time: 4 Hours (includes reading time) Maximum Marks: 100

Document C: Client's Letter (2/2)

I recently thought of a new wound dressing. For some wounds, they release a lot of pus, which has to be removed from the wound. To remove the pus, the environment between the wound and the dressing has to be a vacuum environment. Hence, a device to create a vacuum through the wound dressing can be attached to the wound dressing with a pipe to suck the pus from the wound area. The vacuum device will be attached to the frame of the wound dressing. To prevent the vacuum device from falling off from the wound dressing, the frame has to be attached securely to the backing and cannot be removed. Can I protect this new wound dressing with the vacuum device in this application or in a divisional application? I have not told anyone about this and I have not seen anything like this on the market yet.

Thank you.

PAPER B: AMENDMENT OF A PATENT SPECIFICATION
25 October 2017, Wednesday
1330 – 1730 hrs

Maximum Time: 4 Hours (includes reading time) Maximum Marks: 100

Document D1: EP3333333 A1 (1/8)

Technical Field

[01] There is provided a wound dressing comprising a conformable vapour permeable, liquid impermeable first layer containing perforation means and an imperforate conformable liquid impermeable, vapour permeable second layer attached to the first layer and overlaying the perforation means of the first layer and forming a reservoir into which wound exudate (such as pus) passes and is in evaporated form.

Background (omitted for the purpose of the Qualifying Examination)

Summary

[02] This application relates to a wound dressing which (1) covers the wound without directly contacting the wound, and is impermeable to liquid; (2) allows wound exudate (such as pus) to pass through the surface of the wound into a reservoir; (3) allows the exudate from the wound to dry in the reservoir by passage of vapour therefrom, yet allowing the wound to heal under moist conditions without significant scab formation; (4) does not provide pathways for passage of bacteria to the wound and (5) does not cause significant skin infection under the wound dressing.

[03] Specifically, the wound dressing comprises:

a) a first layer for placing over a wound which is conformable to an anatomical surface of a patient and is able to allow vapour from the wound to pass through (that is permeate) to the external environment. The first layer is also impermeable to liquid throughout substantially the imperforate area and contains perforation means for passing wound extudate through the first layer.

b) a second layer which is imperforate, is conformable to an anatomical surface, is impermeable to liquid and is permeable to vapour. The second layer overlays the perforation means of the first layer and is attached to the first layer on the side opposite to that which contacts the wound and in an area surrounding the perforation means to provide a reservoir into which extudate from the wound can pass and be at least partially evaporated therefrom.

Document D1: EP3333333 A1 (2/8)

[04] The wound dressing also contains a pressure sensitive adhesive on the wound contacting surface of the first layer to attach the wound dressing to the wound.

[05] There is also provided a method of manufacturing the wound dressing forming a reservoir.

Brief Description of Figures

[06] Figure 1 is an exploded perspective view of one wound dressing of this application.

[07] Figure 2 is a perspective view of the wound dressing of Figure 1 with some parts broken away.

[08] Figure 3 is a plan view of the wound dressing of Figures 1 and 2 placed on a wound on an arm of a patient.

[09] Figure 4 is a section view taken along line 4-4 of Figure 3.

Detailed Description of Figures

[010] Referring to the drawings in more detail, Figure 1 is an exploded perspective of a wound dressing 1A. Wound dressing 1A comprises first layer 2 containing perforations 3 and having one surface thereof covered with pressure-sensitive adhesive 4. The perforations 3 in first layer 2 are covered by second layer 5. Second layer 5 is attached to first layer by means of a seal 6, which extends around the entire periphery of second layer 5. Adhesive 4 of first layer 2 is covered by release liner 7 which is removed prior to use.

[011] Attached to first layer 2 on the surface opposite to that containing the pressure sensitive adhesive 4 is frame 8 which contains slit 9 that extends through the entire wound dressing 1A. Frame 8 allows the wound dressing 1A to be applied easily to a

wound and for the wound dressing 1A to be removed easily from the wound by pulling on frame 8 at slit 9.

[012] Wound dressing 1A is depicted in Figure 2 as removed from a packaging and prior to use. All portions are attached with only corner 10 being upturned to show adhesive 4 on the surface of first layer 2 on corner 10. It can also be seen in Figure 2 that release liner 7 extends beyond the first layer 2 and frame 8 to allow for easy grasping and removal of release liner 7 from the adhesive 4 of first layer 2.

[013] Figure 3 shows wound dressing 1A on arm 11 and covering wound 12. Wound dressing 1A is applied to arm 11 over wound 12 by removing release liner 7 from wound dressing 1A and placing wound dressing 1A utilising frame 8 on wound 12 on arm 11. Wound dressing 1A remains affixed to arm 11 by means of adhesive 4 of first layer 2. One of the perforations 3 in first layer 2 in wound dressing 1A is over wound 12. Exudate from wound 12 can pass through perforations 3 over wound 12 or can pass through another perforation 3 adjacent thereto. This is shown more graphically in Figure 4 which shows the section along line 4-4 of Figure 3. In Figure 4, it can be seen that wound dressing 1A is attached to arm 11 over wound 12. Wound dressing 1A contains reservoir 13 containing exudate 14 from wound 12. The exudate 14 passes into reservoir 13 by means of perforation 3. As the second layer 5 can expand, it allows a reservoir 13 to form and expand in size as exudate 14 passes from wound 12 through perforation 3 into reservoir 13. Normally, the flow of exudate from the wound will subside in time by means of normal body functions or when an equilibrium is reached between the pressure forcing the exudate from the body and the resistance of the reservoir to further expansion.

[014] The moisture from exudate 14 slowly passes through second layer 5 because of the vapour permeability of second layer 5. Seal 6 prevents exudate 14 from escaping in a liquid form from reservoir 13.

Document D1: EP3333333 A1 (4/8)

[015] If the wound dressing 1A needs to be removed from the arm 11, a user can hold onto frame 8 at slit 9. Due to the presence of slit 9 which introduces a weakness in the wound dressing 1A, the entire wound dressing (of the first layer 2, second layer 5 and frame 8) can be removed from wound 12 when a pulling force is exerted at slit 9 of frame 8.

[016] In the first layer, the first layer normally comprises a backing and a pressure sensitive adhesive. Any materials that are conformable, impermeable to liquid and permeable to vapour can be used as the backing, such as typical backing materials. The pressure sensitive adhesive material is any typical adhesive material such as Polymer A. The first layer is impermeable to liquid throughout substantially its entire imperforate area. This means that the first layer does not allow liquid to pass through under normal wound healing conditions except at the places in the first layer which are positively perforated to allow the exudate to pass into the reservoir. The perforation means in the first layer are holes or slits or other perforations which do not significantly impede the passage of liquid or wound exudate from the wound into the reservoir of the wound dressing.

[017] The second layer is then attached to the first layer so that the second layer is attached through the backing of the first layer directly to the pressure sensitive adhesive to provide a reservoir which is sealed except for the perforation means which allow the wound exudate to enter the reservoir. As the second layer is permeable to vapour, the moisture in the exudate passes through the second layer in a vapour form to the external environment. In the manner, the reservoir permits the wound exudate to be rapidly removed from the wound site and then to dry in an environment which does not provide a pathway for bacteria to enter the wound. The reservoir is also effectively sealed except for the passage of vapour therefrom. The second layer is a thin polymeric film.

Document D1: EP3333333 A1 (5/8)

[018] The first and second layers are preferably made from a transparent or translucent material to permit viewing of the wound site to which the wound dressing is applied to.

[019] The release liner which is attached to the adhesive of the first layer is a liner which can be released easily when the wound dressing is to be used. Examples of release liner are liners made from or coated with Polymer C or Polymer D.

[020] The frame is made from a carrier material such as Polymer G.

[021] The first and second layers of the wound dressings of the present application are attached to each other by permanent adhesives, heat sealing or other bonding techniques. In order to prevent the reservoir from breaking apart during use or when the reservoir expands due to the entry of exudate into the reservoir, the type of attachment chosen to attach the first layer to the second layer must be such that the first and second layers do not break apart or split from each other at any point in time, even during removal of the wound dressing. In order to facilitate the manufacture of the wound dressing, the various components (such as the perforated first layer, second layer and carrier material, except for the release liner) can be subjected to one attachment step (such as heat sealing at a temperature above 300°C) to form the wound dressing with the various components being securely attached to each other in the wound dressing without breaking apart or splitting at any point in time. The release liner is then adhered to the exposed side of the first layer and a slit created in the wound dressing to form the resultant wound dressing. In order to form the window in the frame, the frame may be subject to die cutting and removal of the cut region before being attached to the second layer.

[022] The reservoir provided in the wound dressing may optionally include within it medicaments or materials that are especially porous to allow quick movement of the wound exudate from the wound into the reservoir.

Document D1: EP3333333 A1 (6/8)

[023] Other embodiments or equivalents that have the same effect of the disclosed wound dressings are part of the disclosure of this application.

Industrial Applicability

[024] The wound dressing of the present application can be used to cover wounds while providing a reservoir for wound exudate to be absorbed away from the wound.

[Claims omitted]

PAPER B: AMENDMENT OF A PATENT SPECIFICATION
25 October 2017, Wednesday
1330 – 1730 hrs

Maximum Time: 4 Hours (includes reading time) Maximum Marks: 100

Document D1: EP3333333 A1 (7/8)

Figure 1

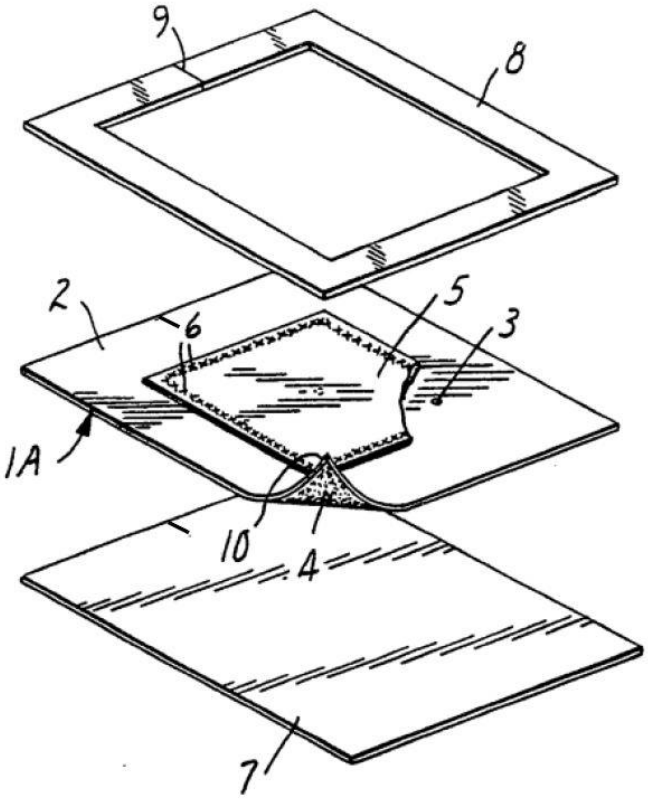

Figure 2

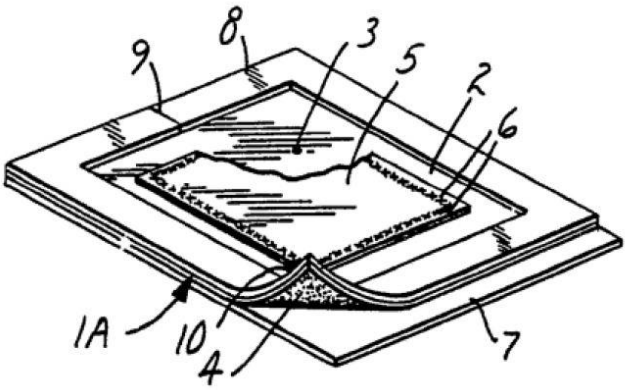

PAPER B: AMENDMENT OF A PATENT SPECIFICATION
25 October 2017, Wednesday
1330 – 1730 hrs

Maximum Time: 4 Hours (includes reading time) Maximum Marks: 100

Document D1: EP3333333 A1 (8/8)

Figure 3

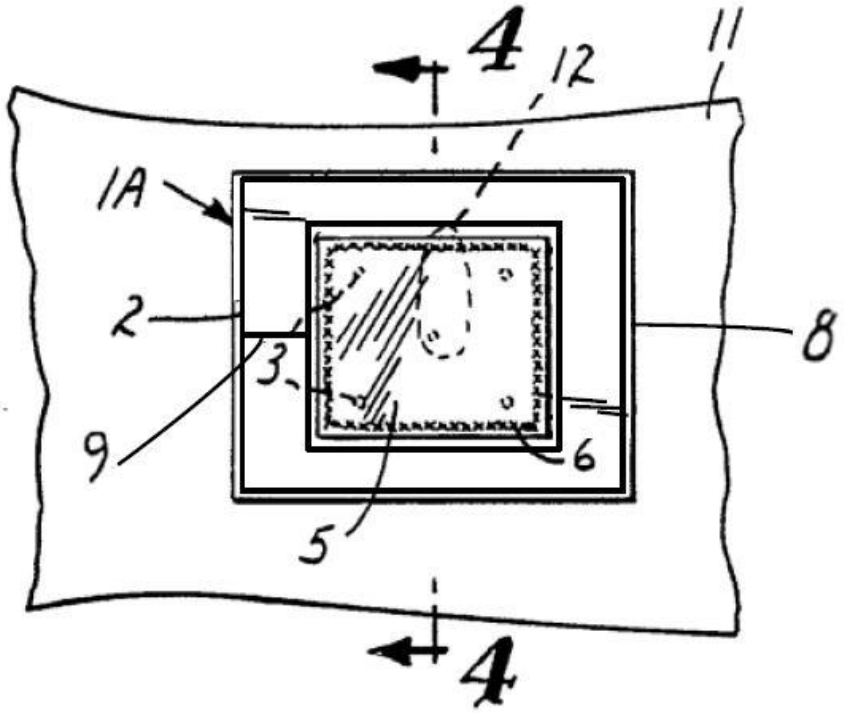

Figure 4

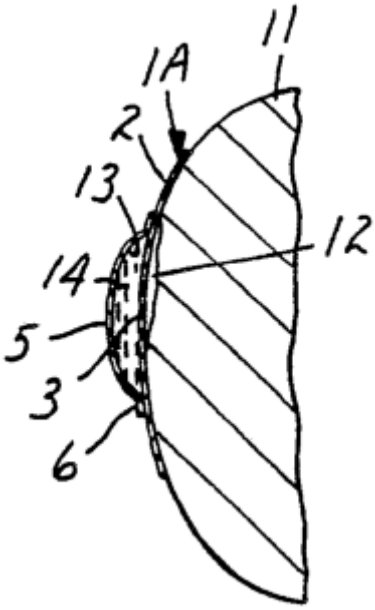

PAPER B: AMENDMENT OF A PATENT SPECIFICATION
25 October 2017, Wednesday
1330 – 1730 hrs

Maximum Time: 4 Hours (includes reading time) Maximum Marks: 100

Document D2: US4444444 (1/3)

Abstract

There is provided a wound dressing having a foam frame that acts as an absorbent, the foam frame being cut to desired shapes and sizes.

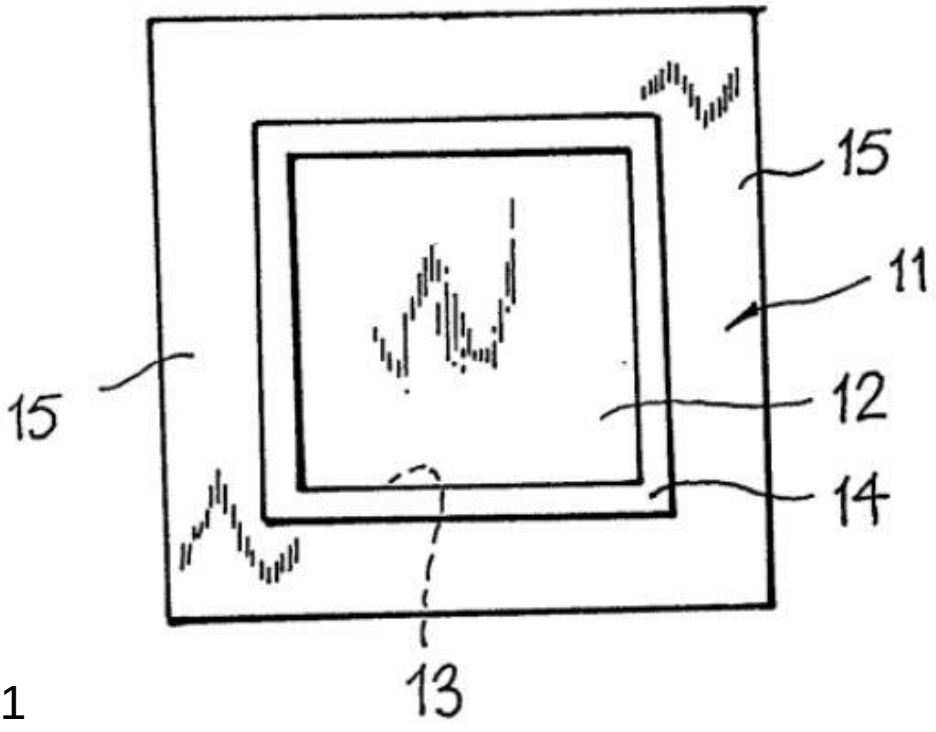

Fig. 1

Document D2: US4444444 (2/3)

Field of Invention

[01] The present invention relates to wound dressings, particularly for wet wounds such as ulcers and pressure sores.

Background (omitted for the purpose of the Qualifying Examination)

Brief Description of Figures

[02] Fig. 1 is a plan view of one wound dressing according to this invention.

Detailed Description of Figures

[03] The dressing of Fig. 1 comprises a foam frame 11 and a transparent, waterproof, water vapour permeable polymer film 12 and is viewed from its wound-facing surface. The visible surface of the foam frame 11 is coated with pressure-sensitive adhesive. The polymer film 12 overlaps the inner edge 13 of the foam frame to form an area 14 in which the polymer film 12 is secured to the foam frame 11 by the pressure-sensitive adhesive. In the outer area 15 of the foam frame, the pressure-sensitive adhesive remains exposed for adhesion of the dressing to the skin around the wound. A sheet of release paper (not shown) is applied over the whole wound-facing surface of the dressing to protect the adhesive at the outer area of the foam frame.

[04] The polymer film 12 may be a single layer or may have more than one layer, for example, a film may be composed of two or more layers of the same or different polymeric material coated or adhered on one another to ensure that any imperfections are covered so that the film provides an effective barrier to microorganisms. The film on the wound facing side is not coated with the pressure-sensitive adhesive. Where the film is a multi-layer, one of the layers may be an absorbent gel to absorb liquid exuding from a wound (such as wound extudate or pus).

[05] The foam may be a flexible foam or sponge and may be of any shape (such as circular, elliptical, square or rectangular) and may be of any desired size or thickness,

Document D2: US4444444 (3/3)

as long as the frame surrounds the wound without touching the wound margins. The frame may be cut from a sheet of foam. The foam is preferably coated with the pressure-sensitive adhesive before the frame is cut out. The pressure-sensitive adhesive can be covered by a release liner during the cutting operation if desired. Wound dressings of different sizes can be cut from the sheet of foam by cutting in concentric circles separated by the desired width of frame, thus reducing wastage of the foam material.

[06] The wound dressing of the invention has the advantage that the pressure-sensitive adhesive does not contact the wound and thus cannot stick to the wound margins, if a dressing of adequate size is used. It also has the advantage that the foam forms a frame which, although flexible, is stiffer than the film and facilitates handling and positioning of the dressing. In order to ensure that the polymer film is affixed properly to the foam frame, the extent of the overlap between the polymer film and the foam frame should be of a sufficient thickness, such as from 3 to 10 mm. If the extent of overlap is smaller than 3 mm, the polymer film will not adhere to the foam frame effectively and will fall out prematurely. If the extent of overlap is more than 10 mm, this will be excessive and lead to wastage of the pressure-sensitive adhesive and foam frame.

Industrial Applicability

[07] The wound dressing of the present invention can be used to cover wounds while ensuring that the wound dressing does not stick to the wound.

[Claims omitted]

THIS IS A BLANK PAGE

Document D3: Pamphlet downloaded from Singapore website

www.patchesandall.com.sg (1/2)

Pamphlet downloaded from Singapore website www.patchesandall.com.sg

Date on pamphlet: 20 August 2014

Introducing a new bag patch for those looking to add colour to their bags! Our bag patch comes in different designs and the best thing about our bag patch is that the designs can be removed and replaced with other designs easily due to the open frame that allows for swopping of the designs! Our bag patch does not require sewing or ironing, just remove the liner, stick the bag patch to your bag and you are good to go!

How it works

The bag patch comes with a frame that has a slot on the side to allow the designs to be changed. When you are tired of seeing the old design, simply push out the old design through the slot, insert a new one through the slot and voila! You have a new design!

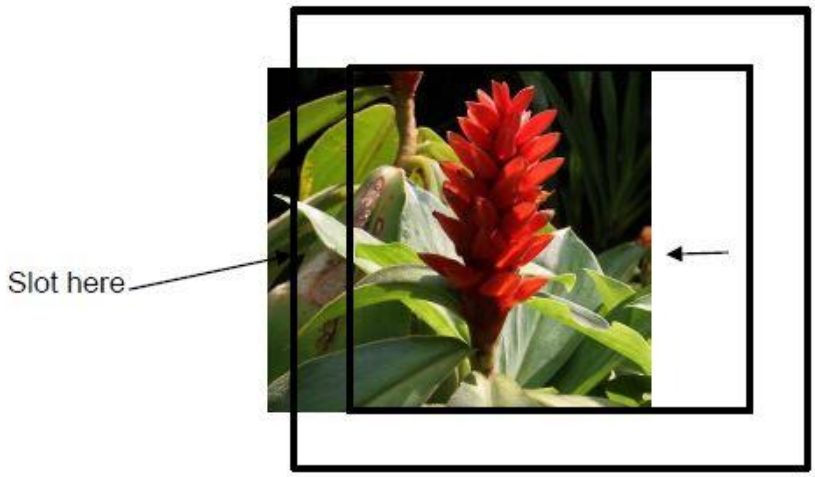

The bag patch comes with a backing that is of a soft material, usually cloth, and the shape of the backing is maintained by the frame, made from a harder and more rigid material, which is adhered to the backing. On the bottom of the bag patch, there is a pressure-sensitive adhesive allowing the bag patch to stick onto a desired position of your bag once the liner is released

Document D3: Pamphlet downloaded from Singapore website

www.patchesandall.com.sg (2/2)

from the pressure-sensitive adhesive. If the frame is broken, the frame can be removed easily from the bag patch as well and a new frame stuck onto the backing. New frames are sold separately and come with a double-sided adhesive tape for sticking onto the backing.

For more information and shopping, come visit us at www.patchesandall.com.sg!

End