INTELLECTUAL PROPERTY OFFICE OF SINGAPORE
PATENT AGENTS QUALIFYING EXAMINATION 2012

PAPER B: AMENDMENT OF A PATENT SPECIFICATION
3 October 2012, Wednesday
1330 – 1730 hrs

Maximum Time: 4 Hours (includes reading time) Maximum Marks: 100

INTELLECTUAL PROPERTY
OFFICE OF SINGAPORE

INSTRUCTIONS TO CANDIDATES

1. This Paper consists of 28 pages, including this cover page.

2. Write your answers in English. Answers in any other language will not be marked. Answers in illegible handwriting will not be taken into consideration.

3. Two copies of the question paper are provided, one is for your reading and the other is for your use (optional) when answering the question(s) in the Answer Booklet(s).

4. Only your answers and/or drawings to the question(s) written or glued in the Answer Booklet(s) provided by the Examination Secretariat will be considered. You are to write on one side of each sheet in the Answer Booklet (s).

5. Information provided in the question(s) may be obtained from actual situations or modified therefrom for the purpose of this examination. You should accept the facts given in the Paper. Assume also that the prior art given is exhaustive.

6. For the purpose of this Paper you do not need to propose any amendments to the description of the Patent Application.

To be continued

PAPER B: AMENDMENT OF A PATENT SPECIFICATION
03 October 2012, Wednesday
1330 – 1730 hrs

Maximum Time: 4 Hours (includes reading time) Maximum Marks: 100

7. The documents provided in the question are:

   a. Document A: SG Patent Application No: 1234567 (7 pages of description plus claims and 4 pages of drawings);

   b. Document B1: Written Opinion (3 pages);

   c. Document B2 – Prior Art D1 (9 pages)

   d. Document C1 - Client's Remarks and Instructions (includes questions) (2 pages) ; and

   e. Document C2: Article Found by Client (1 page of drawings)

End

PAPER B: AMENDMENT OF A PATENT SPECIFICATION
03 October 2012, Wednesday
1330 – 1730 hrs

Maximum Time: 4 Hours (includes reading time) Maximum Marks: 100

Document A: SG Patent Application No: 1234567 (1/11)

Fluid Dispenser

[001] Technical Field

[002] The present invention relates broadly to a fluid dispenser, and particularly to a dual compartment dispenser.

[003] Background

[004] Dispensers such as dispenser for toothpaste or glue are typically in the form of tubes with one closed end and a nozzle or spout formed at the opposite end. The nozzle can be opened and closed using for example screw caps or hinged caps fixed onto the nozzle.

[005] Often, the fluid to be dispensed comprises two different components, for example in the case of two-component glues or in the case of a mouth freshener component and an anti-cavity component of toothpaste.

[006] For toothpastes, the components are typically mixed into a single tube during production of the tubes, by co-filling the tube body with the separate fluids from different dispensing nozzles. This has the disadvantage that a consumer cannot adjust the composition of the dispensed toothpaste during use. Such a control can be desired to provide flexibility in the composition, for example where a user wishes to have either a stronger mouth freshening effect.

[007] For two-component glues, typically two separate tubes are provided, one for each component. There have been proposals to provide a single tube, with an inner pouch disposed inside the tube. The main body of the tube and the inner pouch hold the respective components. In use, the inner pouch is first ruptured or burst, for example by providing a perforation on the inner pouch, which can be broken when applying pressure by squeezing the tube from the outside. The mixed fluid is then dispensable through a single nozzle of the tube. Such designs have the disadvantage that the two components come into contact inside the main body of the tube, which typically means that the usability time of the glue after first use is short. Also, the user has generally no control over adjusting the dosage of the respective components.

[008] At least one preferred embodiments of the present invention seek to address one or more of the above disadvantages.

PAPER B: AMENDMENT OF A PATENT SPECIFICATION
03 October 2012, Wednesday
1330 – 1730 hrs

Maximum Time: 4 Hours (includes reading time) Maximum Marks: 100

Document A: SG Patent Application No: 1234567 (2/11)

[009] Summary

[0010] In accordance with one aspect of the present invention, there is provided a dispenser comprising a main body; and one or more nozzles formed on the main body; wherein the main body comprises a first compartment in fluid communication with one of the at least one nozzles and a second compartment in fluid communication with one of the at least one nozzles.

[0011] Drawings

[0012] Figure 1 shows a schematic cross-sectional view of a dual compartment dispenser according to a first embodiment.

[0013] Figure 2 shows a schematic cross-sectional view of a dual compartment dispenser according to a second embodiment.

[0014] Figure 3 shows a schematic cross-sectional view of a dual compartment dispenser according to a third embodiment.

[0015] Figure 4a shows a schematic perspective view of a divided, hinged cap for use with dispensers according to embodiments of the present invention, in a closed state.

[0016] Figure 4b shows a schematic perspective view of a divided, hinged cap for use with dispensers according to embodiments of the present invention, in a state in which only one half of the divided top of the cap is opened.

[0017] Description

[0018] In a first embodiment shown in Figure 1, a tube 100 comprises a main body 102, which is divided into two compartments 104, 106. The two compartments 104, 106 are disposed in a staggered manner in a dispensing direction (indicated by arrow 108) of a nozzle 110 of the tube 100. The upper compartment 104 is in direct fluid communication with the nozzle 110, whereas the lower compartment 106 is in fluid communication with the nozzle 110 via a tubular channel 112 formed on an inner wall of the main body 102, and extending through the upper compartment 104.

[0019] The channel 112 has one open end 114 in fluid communication with the lower compartment 106, and the other open end 116 in fluid communication with the nozzle 110. The open end 116 is preferably located in close proximity to an upper or outer end 118 of the nozzle 110. In an alternative embodiment, the open end is located at the entry

Document A: SG Patent Application No: 1234567 (3/11)

of the lower or inner end 119 of the nozzle 110, separating the fluids in the main body 102.

[0020] It was found that a small mixed portion within the nozzle 110 does not significantly reduce the usability time. Advantageously, the separation is also maintained within the nozzle 110 in this embodiment. Pre-dispensing contact between the components can advantageously be avoided, which in turn can increase the usability time after first use. This feature can also facilitate that the flow of fluid from the lower compartment 106 is substantially uninhibited by a flow from the upper compartment 104 during dispensing.

[0021] In this embodiment, the open end 116 of the channel 112 is dimensioned to occupy about one half of the dispensing area of the nozzle 110, so that the fluid flows from the compartments 104 and 106 respectively are provided with substantially the same dispensing cross-section. The channel 112 has a substantially constant cross-sectional dimension along its length, which is preferably the same or slightly larger than the cross-sectional dimension of the open end 116.

[0022] The applicant has found that the staggered arrangement of the compartments 104 and 106 in the dispensing direction 108 can have the unexpected advantage that a user can adjust the respective dispensing flows from the compartments 104, 106 using a single hand. More particular, it has been found that a user can control relative squeezing strengths between the fingers of one hand along the length of the tube 100 when gripping the tube main body 102. The design in the first embodiment thus preferably provides the user with the flexibility of easily adjusting the relative dispensing flows and thus dispensing volumes of the fluids from the respective compartments 104, 106. This can provide advantages, for example where a user wishes to have either a stronger mouth freshening effect or a stronger dose of the anti-cavity component. Similarly, for two component glue, different dispensed mixtures of the components can be readily achieved.

[0023] In a second embodiment shown in Figure 2, a tube 200 comprises a main body 202, which is divided into two compartments 204, 206. The two compartments are disposed side-by-side along a dispensing direction (indicated by arrow 208) of a nozzle 210 of the tube 200. The left compartment 204 is in direct fluid communication with the nozzle 210, and also the right compartment 206 is in direct fluid communication with the

Document A: SG Patent Application No: 1234567 (4/11)

nozzle 210 in this embodiment. A dividing wall 212 between the compartments 204, 206 extends at least to a lower or inner end 213 of the nozzle 210, separating the fluids in the main body 202, and preferably extends to an upper or outer end 214 of the nozzle 210, as shown in Figure 2, maintaining the separation of the fluids in the nozzle 210. This can advantageously avoid pre-dispensing contact between the components, which in turn can increase the usability time after first use.

[0024] The applicant has found that the side-by-side arrangement of the compartments 204 and 206 along the dispensing direction 208 can still provide a user with the ability to adjust the respective dispensing flows from the compartments 204, 206. However, compared to the first embodiment, adjusting the respective dispensing flows using a single hand is more cumbersome and less intuitive. It was found that users typically had to use both hands in order to achieve an adequate control. This may make the use of this embodiment less suitable for some applications such as for toothpastes, where the user typically holds the toothbrush in one hand during dispensing. However, the second embodiment has the advantage of lower manufacturing costs, since the side-by-side design without the need to form a channel on an inside wall of the tube (compare Figure 1) is easier to implement in a production line process.

[0025] In a third embodiment shown in Figure 3, a tube 300 comprises a main body 302, which is divided into two compartments 304, 306. The two compartments are disposed side-by-side along a dispensing direction (indicated by arrow 308) of two parallel, equally sized, nozzles 310a, b of the tube 300. The left compartment 304 is in direct fluid communication with the left nozzle 310a, and the right compartment 306 is in direct fluid communication with the right nozzle 310b in this embodiment. Also, the fact that different nozzles 310a, b are used for the respective compartments 304, 306 can reliably avoid pre-dispensing contact between the components, which results in maximum usability time after first use.

[0026] Like in the second embodiment, the side-by-side arrangement of the compartments 304 and 306 along the dispensing direction 308 can still provide a user with the ability to adjust the respective dispensing flows from the compartments 304, 306. However, compared to the first embodiment in Figure 1, adjusting the respective dispensing flow using a single hand is more cumbersome and less intuitive. It was found that users typically had to use both hands in order to achieve an adequate control. This

Document A: SG Patent Application No: 1234567 (5/11)

may make the use of this embodiment less suitable for some applications such as for toothpastes, where the user typically holds the toothbrush in one hand during dispensing. However, compared to the first and the second embodiments, the third embodiment has the advantage of the lowest manufacturing costs, since in one implementation, production can proceed with two parallel running, conventional single compartment, single nozzle tube production lines, with an additional production line station for joining the single compartment, single nozzle tubes to produce the two compartments, two respective nozzles design of the third embodiment.

[0027] It will be appreciated that various changes and modifications may be made to the embodiments described herein, without departing from the spirit or scope of the present invention. For example, in the first and second embodiments, a divided, hinged cap 400 may be provided for the nozzle, as shown in Figures 4a and b. The divided hinged cap 400 is preferably disposed to selectively allow dispensing of fluid from substantially only one of the compartments, or from both the first and second compartments by selectively opening halfs 402, 404 of the flap 406 of the cap 400. This can be desirable in many applications, for example where a user only wishes to use the mouth freshening component.

PAPER B: AMENDMENT OF A PATENT SPECIFICATION
3 October 2012, Wednesday
1330 – 1730 hrs

Maximum Time: 4 Hours (includes reading time) Maximum Marks: 100

Document A: SG Patent Application No: 1234567 (6/11)

Claims

1. A dispenser comprising:
a main body; and
one or more nozzles formed on the main body; wherein
the main body comprises a first compartment in fluid communication with one of the at least one nozzles and a second compartment in fluid communication with one of the at least one nozzles.

2. The dispenser of claim 1, wherein the first compartment is disposed above the second compartment.

3. The dispenser of claim 2, comprising one nozzle, and wherein the first and second compartments are in fluid communication with said one nozzle.

4. The dispenser of claims 2 or 3, wherein the main body comprises a channel in fluid communication with the second compartment at one end thereof, and in fluid communication with said one nozzle at another end thereof.

5. The dispenser of claim 4, wherein the channel extends at least to a lower end of said one nozzle

6. The dispenser of claim 5, wherein the channel extends substantially to an upper end of said one nozzle.

7. The dispenser of claim 1, wherein the first and second compartments are disposed side-by-side.

8. The dispenser of claim 7, comprising two nozzles disposed at the same end of the main body, and the first and second compartments are in fluid communication with the first and second nozzles.

PAPER B: AMENDMENT OF A PATENT SPECIFICATION
03 October 2012, Wednesday
1330 – 1730 hrs

Maximum Time: 4 Hours (includes reading time) Maximum Marks: 100

Document A: SG Patent Application No: 1234567 (7/11)

9. The dispenser of claim 7, comprising one nozzle, wherein the first and second compartments are in fluid communication with said one nozzle.

10. The dispenser of claim 9, comprising a dividing wall disposed between the first and second compartments, wherein the dividing wall extends at least to a lower end of said one nozzle

11. The dispenser of claim 10, wherein the dividing wall extends substantially to an upper end of said one nozzle.

PAPER B: AMENDMENT OF A PATENT SPECIFICATION
03 October 2012, Wednesday
1330 – 1730 hrs

Maximum Time: 4 Hours (includes reading time) Maximum Marks: 100

Document A: SG Patent Application No: 1234567 (8/11)

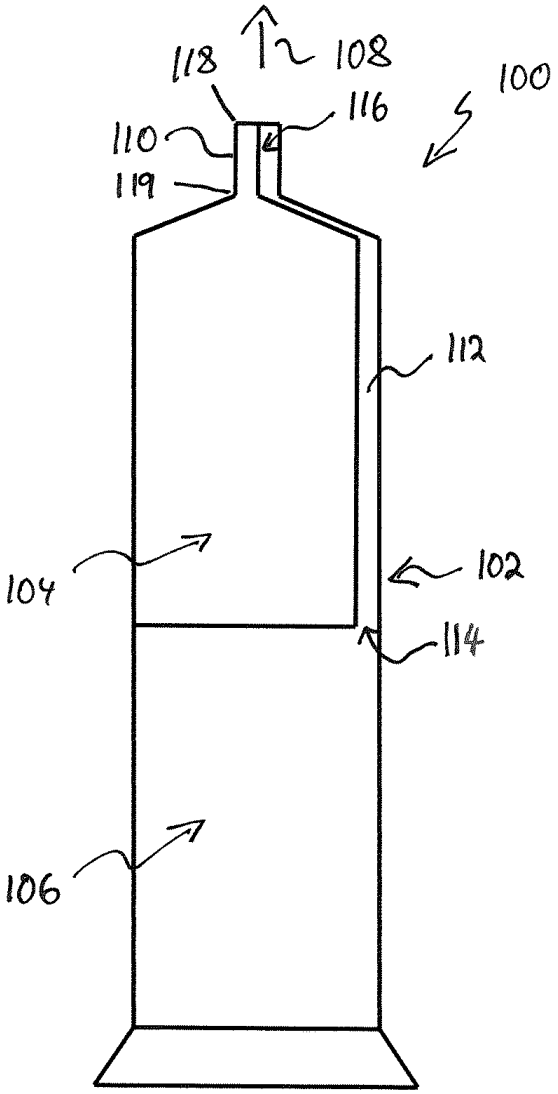

Figure 1

PAPER B: AMENDMENT OF A PATENT SPECIFICATION
03 October 2012, Wednesday
1330 – 1730 hrs

Maximum Time: 4 Hours (includes reading time) Maximum Marks: 100

Document A: SG Patent Application No: 1234567 (9/11)

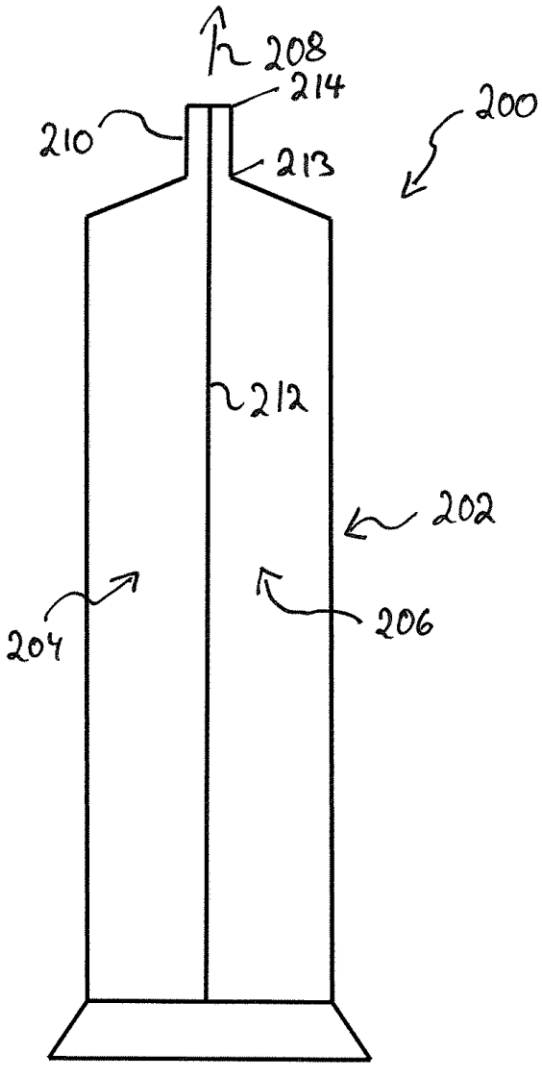

Figure 2

PAPER B: AMENDMENT OF A PATENT SPECIFICATION
03 October 2012, Wednesday
1330 – 1730 hrs

Maximum Time: 4 Hours (includes reading time) Maximum Marks: 100

Document A: SG Patent Application No: 1234567 (10/11)

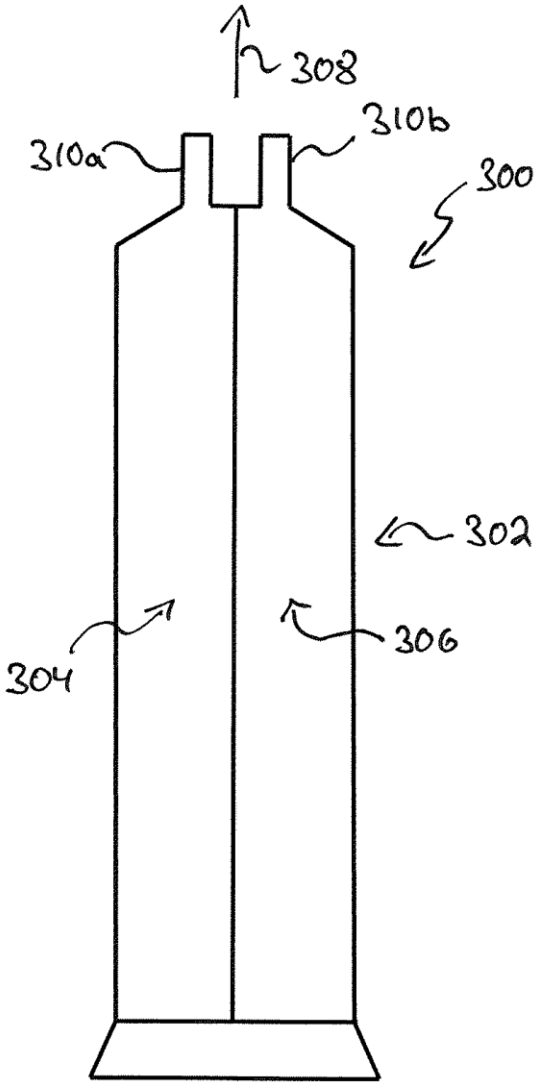

Figure 3

PAPER B: AMENDMENT OF A PATENT SPECIFICATION
03 October 2012, Wednesday
1330 – 1730 hrs

Maximum Time: 4 Hours (includes reading time) Maximum Marks: 100

Document A: SG Patent Application No: 1234567 (11/11)

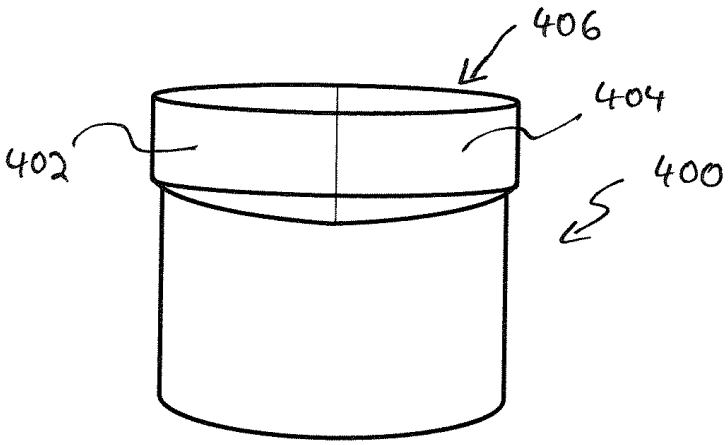

Figure 4a

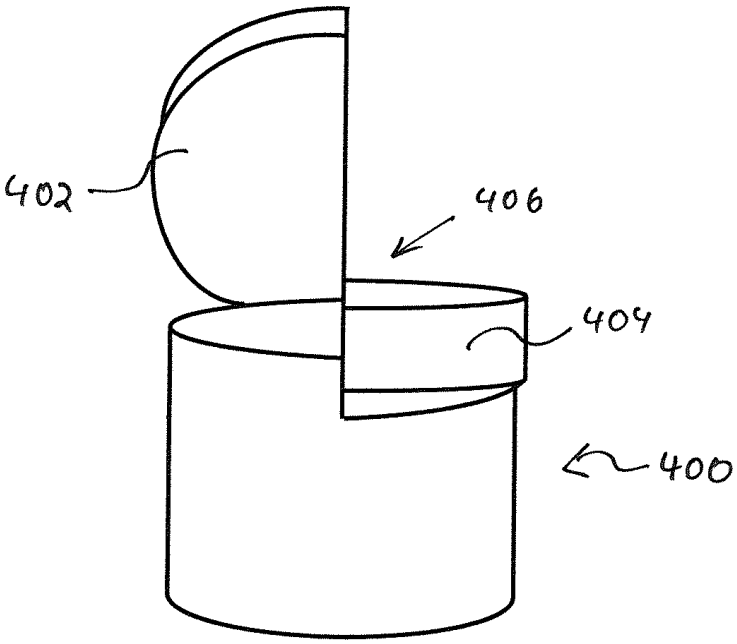

Figure 4b

PAPER B: AMENDMENT OF A PATENT SPECIFICATION
03 October 2012, Wednesday
1330 – 1730 hrs

Maximum Time: 4 Hours (includes reading time) Maximum Marks: 100

Document B1: Written Opinion (1/3)

Written Opinion dated 1 September 2012 for Singapore Patent Application number 1234567, filed 1 May 2010, no priority claimed.

Patentability:

Novelty:	Yes	3-6, 8-11
	No	1, 2, 7
Inventiveness:	Yes	4-6
	No	1-3, 7-11
Industrial Applicability:	Yes	1-11
	No	--

Citations

US Patent publication 2007/0187429 A1 (D1)

Applicant's admitted prior art in paragraph [007] of the specification as filed, "burstable inner compartment tube" (AAPA).

Novelty

1) Claims 1, 2, 7 are not novel over D1, published on 16 August 2007.

D1 discloses a dispenser 400 having a main body with two compartments 20, 22 and two nozzles at opposite ends of the dispenser, wherein the compartments 20, 22 are in fluid communication with respective ones of the nozzles. Therefore, D1 discloses all features of claim 1, rendering claim 1 not novel.

In D1, in one orientation, the two compartments are disposed one above the other. Therefore, D1 discloses all features of claim 2, rendering claim 2 not novel.

In D1, in another orientation, the two compartments are disposed side-by-side. Therefore, D1 discloses all features of claim 7, rendering claim 7 not novel.

2) Claim 1 is not novel over AAPA, referred to in the background of the application.

Document B1: Written Opinion (2/3)

AAPA is a dispenser which has one nozzle, an inner body of dispenser as a first compartment, as well as an inner pouch, after rupturing, as a second compartment, are both in fluid communication with the one nozzle. Therefore, AAPA discloses all features of claim 1, rendering claim 1 not novel.

Inventiveness

3) Claim 8 is not inventive over D1.

The dispenser in D1 can be readily folded such that both nozzles are disposed at the same end. Therefore, a person skilled in the art, faced with the problem of how to dispense the fluids from one side, would arrive at the invention of claim 8 without exercising an inventive step. Therefore, claim 8 is not inventive over D1 based on the Problem-Solution approach.

4) Claims 2, 3, 7, and 9 to 11 are not inventive over AAPA.

While AAPA does not specify the relative position of the pouch within the main body, a relative positioning "above" (claim 2) or "side-by-side" (claim 7) would be two of a limited number of possibilities for a person skilled in the art. Therefore, claims 2 and 7 are not inventive over AAPA.

In relation to claim 3, which is dependent on claim 2, the inner body of the tube as a first compartment, as well as the inner pouch, after rupturing, as a second compartment, are both in fluid communication with the one nozzle. Therefore, the additional feature of claim 3 cannot provide inventiveness.

In relation to claim 9, which is dependent on claim 7, the inner body of the tube as a first compartment, as well as the inner pouch, after rupturing, as a second compartment, are both in fluid communication with the one nozzle. Therefore, the additional feature of claim 9 cannot provide inventiveness.

In relation to claims 10 and 11, which are dependent on claim 9, having a separating wall between the compartments extend for a particular length is an obvious design parameter/choice,

Document B1: Written Opinion (3/3)

which does not involve an inventive activity. Therefore, the additional feature of claims 10 and 11 cannot provide inventiveness.

Clarity objections:

In claims 5, 6, 10, and 11 the terms "upper end" and "lower end" are unclear, as there is no relative or absolute definition provided, rendering the scope of claims unclear.

PAPER B: AMENDMENT OF A PATENT SPECIFICATION
03 October 2012, Wednesday
1330 – 1730 hrs

Maximum Time: 4 Hours (includes reading time) Maximum Marks: 100

Document B2 – Prior Art D1 (1/9)

(19) **United States**
(12) **Patent Application Publication** (10) **Pub. No.: US 2007/0187429 A1**
Farahmand (43) **Pub. Date: Aug. 16, 2007**

(54) **DUAL OPENING TUBULAR DISPENSER**

(76) Inventor: **Bardia Farahmand**, Richmond, CA (US)

Correspondence Address:
JONES DAY
222 EAST 41ST ST
NEW YORK, NY 10017 (US)

(21) Appl. No.: **11/354,502**

(22) Filed: **Feb. 15, 2006**

Publication Classification

(51) **Int. Cl.**
B65D 35/22 (2006.01)
(52) **U.S. Cl.** **222/94**

(57) **ABSTRACT**

A single or dual compartment dispenser comprises a tubular body and capped openings on the opposite ends of the tube. The tubular body could be continuous, and hold a singular content, which can be extruded from either end, or it can be divided into separate compartments, e.g., connected at the middle of the tube by a crimp. The caps to each end can be of various types, e.g., twist type, hinge or flip type, or other common designs. The product dispensed from each opening may be the same or of alternate variety, and may include any personal or household products, e.g., products for facial, oral, skin, or hair care, lubricants, glues, sealants, paints, food, condiments and/or and other household or professional products. The products in a particular tube may be similar, but have different flavors, aroma or strength, such as products for adult or child, male or female, and whitening or sensitive teeth.

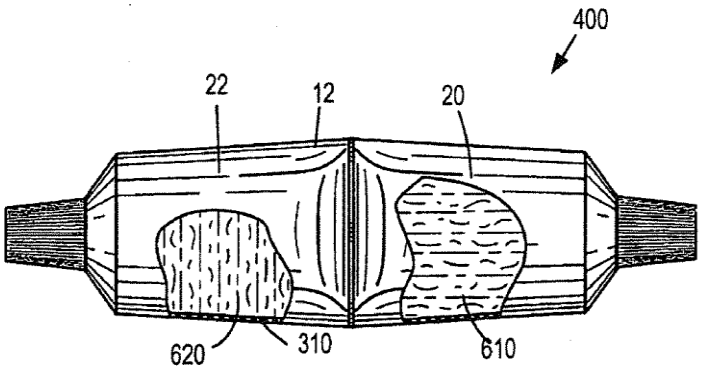

*Note: This document has been modified for the purpose of the examination

PAPER B: AMENDMENT OF A PATENT SPECIFICATION
03 October 2012, Wednesday
1330 – 1730 hrs

Maximum Time: 4 Hours (includes reading time) Maximum Marks: 100

Document B2 – Prior Art D1 (2/9)

Patent Application Publication Aug. 16, 2007 **US 2007/0187429 A1**

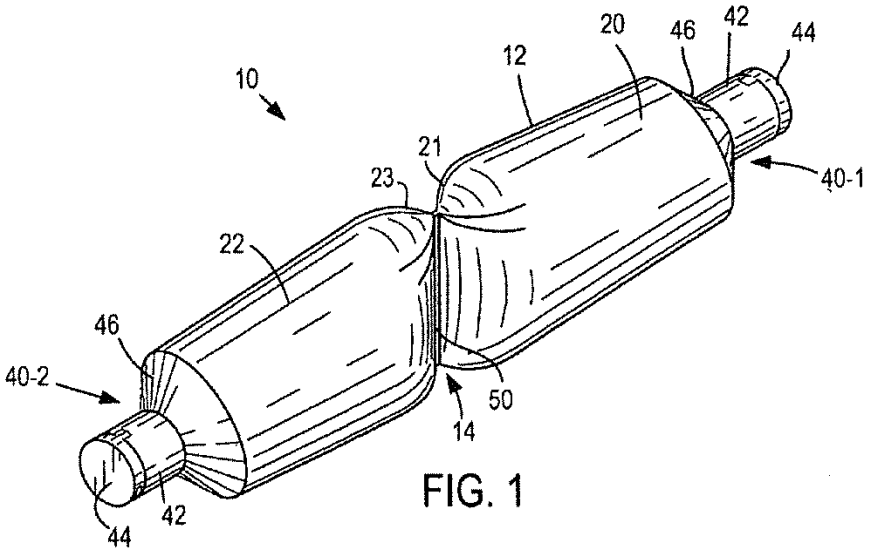

FIG. 1

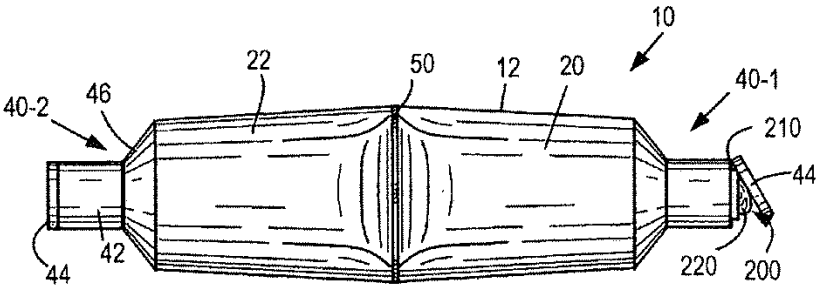

FIG. 2

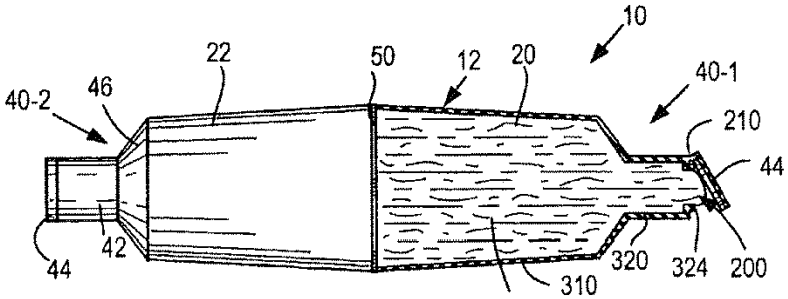

FIG. 3

PAPER B: AMENDMENT OF A PATENT SPECIFICATION
03 October 2012, Wednesday
1330 – 1730 hrs

Maximum Time: 4 Hours (includes reading time) Maximum Marks: 100

Document B2 – Prior Art D1 (3/9)

Patent Application Publication Aug. 16, 2007 US 2007/0187429 A1

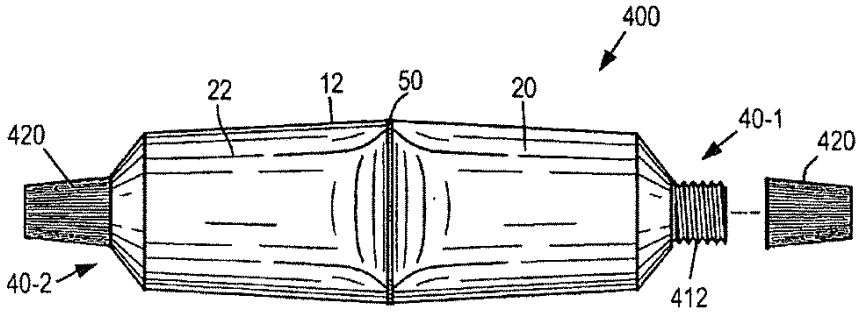

FIG. 4

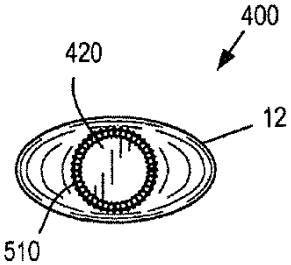

FIG. 5

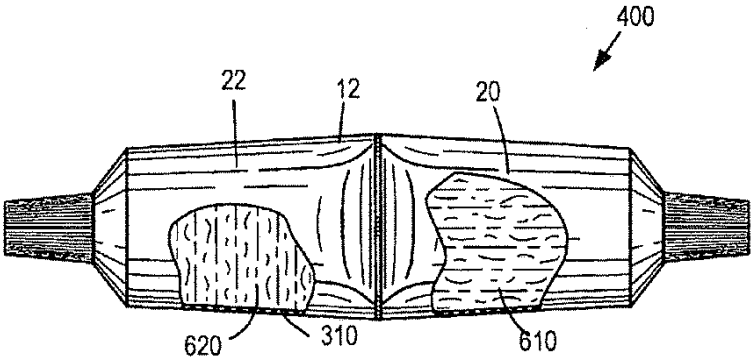

FIG. 6

PAPER B: AMENDMENT OF A PATENT SPECIFICATION
03 October 2012, Wednesday
1330 – 1730 hrs

Maximum Time: 4 Hours (includes reading time) Maximum Marks: 100

Document B2 – Prior Art D1 (4/9)

Patent Application Publication Aug. 16, 2007 US 2007/0187429 A1

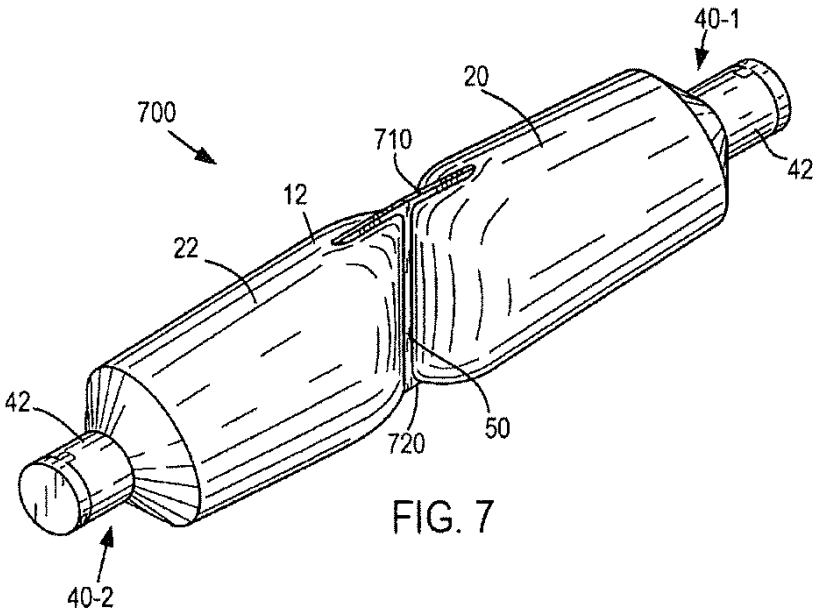

FIG. 7

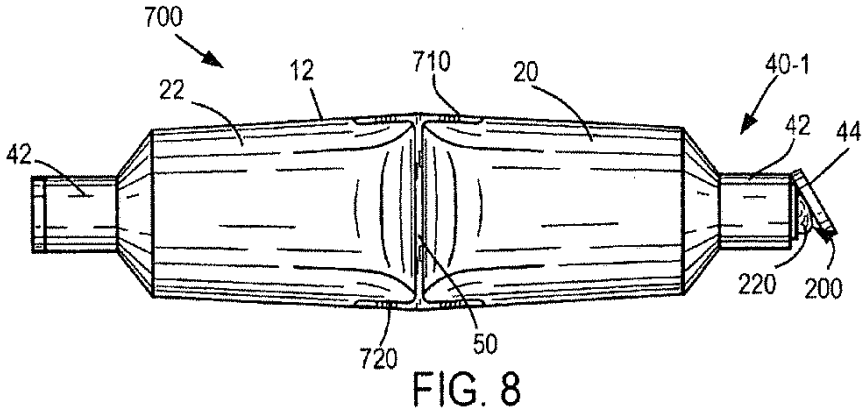

FIG. 8

PAPER B: AMENDMENT OF A PATENT SPECIFICATION
03 October 2012, Wednesday
1330 – 1730 hrs

Maximum Time: 4 Hours (includes reading time) Maximum Marks: 100

Document B2 – Prior Art D1 (5/9)

Patent Application Publication Aug. 16, 2007 **US 2007/0187429 A1**

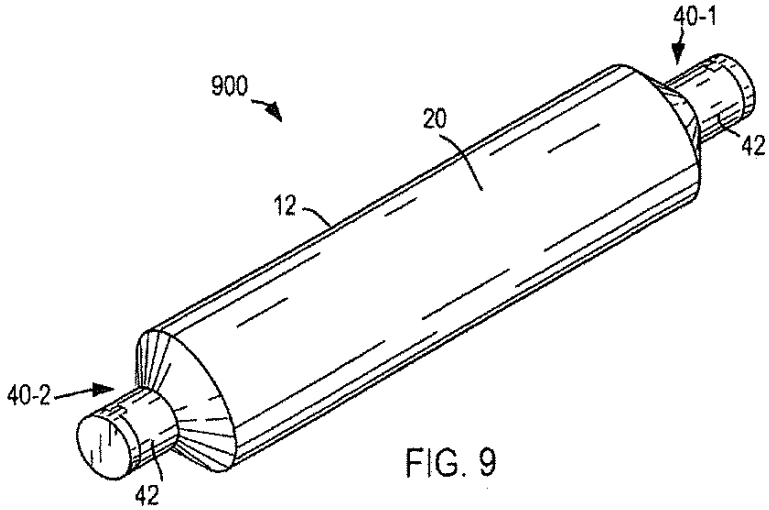

FIG. 9

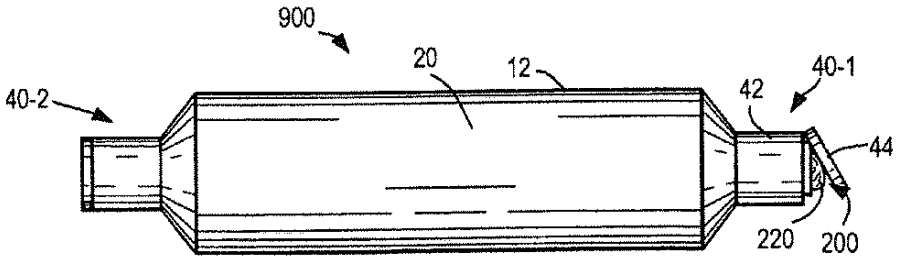

FIG. 10

Document B2 – Prior Art D1 (6/9)

DUAL OPENING TUBULAR DISPENSER

TECHNICAL FIELD OF THE INVENTION

The invention relates to containers, and more particularly to tubular containers for storing and dispensing one or more materials.

BACKGROUND OF THE INVENTION

People usually do not share toothbrushes, but not many realize that sharing toothpaste can also spread germs. When a toothbrushes touch the tube, germs may transfer from the toothbrush to the toothpaste tube, such that when another person uses the toothpaste those germs may be transferred onto their toothbrush. In this way, bacteria can move from toothbrush to toothbrush, passing opportunistic infections such as periodontal disease and the common cold from one person to another. Sharing of containers of other personal products, e.g., soaps and body lotions, can carry similar risks.

To avoid the risk of cross-contamination between toothbrushes, many health professionals recommend having separate tubes of toothpaste for each individual in a household. However, following this recommendation to store and/or carry multiple containers is not always practical when space is a consideration, e.g., when bathroom storage space is limited or when traveling. In such situations, a single container having multiple openings for dispensing contents may be desirable.

In some cases, convenience and desirability may be enhanced by providing a single container that includes two different flavors or strengths of toothpaste or another a particular type of product, such as toothpaste flavored toothpastes for adults and for children, toothpastes for whitening and for sensitive teeth, lotions or soaps scented for females and for males, etc. It may also be commercially desirable to offer two or more related products together in one package to a consumer. For example, a manufacturer might wish to package together different types of personal and/or household products that are often used together but generally packaged in separate containers, for example shampoos and conditioners, soaps and lotions, sunscreen and after-sun lotion, different types of makeup or facial products, different types of glues or sealants, etc.

SUMMARY OF THE INVENTION

A single or dual compartment dispenser comprises a tubular body and capped openings, or dispense orifices, on the opposite ends of the tube. The tubular body may be continuous and hold a singular content that can be expelled from either end, or it can be divided into separate compartments, e.g., connected at the middle of the tube by a crimp or other seal or barrier. Caps covering each end can be of various types, e.g., twist type, hinge or flip type, or other known designs.

The product dispensed from each opening may be the same or of different varieties, and may include any personal or household product, e.g., products for facial, oral, skin, or hair care, lubricants, glues, sealants, paints, food, condiments and/or and other household or professional product. In instances where the products in a particular tube are different, they may in fact be similar, but have different flavors, aroma or strength, such as products for adult or child, male or female, and whitening or sensitive teeth. The openings may be marked by different indicia, e.g., colors (e.g., blue and pink), icons (e.g., adult and child) or descriptive text, for example such that two persons can share a single tube but still have individual dispensers. In other embodiments, different products which are commonly used together may be included in the same container, for example baby toothpaste and baby cream can be packaged as one unit, or hand cream for women and whitening toothpaste can be packaged as one unit. Other exemplary combinations include shampoos and conditioners, shampoos and lotions, as well as adult and children sunscreen lotion. The different combinations afforded by the present invention are limitless.

In one aspect a dispenser comprises a tubular body and two separate openings, and is configured to store and dispense one or more compositions (materials). The two openings of the container are preferably on opposite ends of the tubular body, and each opening preferably includes or is configured to mate with a cap. In some embodiments, the tubular body forms a single compartment for holding a material to be dispensed through the two separate openings on opposite ends of the body. In other embodiments, the tubular body comprises a first compartment for dispensing a first material through a first orifice, and a second compartment for dispensing a second material through a second orifice, where the first and second orifices are on opposing ends of the tubular body. In one embodiment, the tubular body is divided into two compartments by a transverse crimp or other seal in an approximately middle portion of the tube.

The present invention can be better understood by reference to the following drawings, wherein like references numerals represent like elements. The drawings are merely exemplary to illustrate certain features that may be used singularly or in combination with other features and the invention should not be limited to the embodiments shown.

FIG. **1** is a perspective view of an illustrative embodiment of a tubular dispenser having dual openings according the present invention;

FIG. **2** is a top view of the tubular dispenser of FIG. **1**;

FIG. **3** is a partial cross sectional top view of the tubular dispenser of FIG. **1**;

FIG. **4** is a top view of another illustrative embodiment of a tubular dispenser having dual openings according to the present invention;

FIG. **5** is an end view of the tubular dispenser of FIG. **4**;

FIG. **6** is a partial cutaway top view of the tubular dispenser of FIG. **4**;

FIG. **7** is a perspective view of another illustrative embodiment of a tubular dispenser having dual openings according to the present invention;

FIG. **8** is a top view of the tubular dispenser of FIG. **7**;

FIG. **9** is a perspective view of another illustrative embodiment of a tubular dispenser having dual openings according the present invention;

FIG. **10** is a top view of the tubular dispenser of FIG. **9**;

Document B2 – Prior Art D1 (7/9)

DETAILED DESCRIPTION AND FIGURES

Referring to FIGS. **1-3**, an exemplary dispenser **10** comprises a tubular body **12**, to each end of which is integrally united an end piece **40-1** and **40-1** (generally referred to herein as end piece **40**) through which contents of the body may be dispensed. Each end piece **40** may include a collar **46** and a cap section **42**, where the collar is preferably tapered from the outer wall of the tubular body (e.g., wall **310** of FIG. **3**) preferably attaches the cap to the tubular body. The cap may be integral with the collar **46**, or may be permanently or removably attached to a neck (not shown) of the end piece **40**.

Dispenser **10**, also referred to herein as tubular container **10**, may include a divider or seal **50**, which divides the container **10** into two compartments, e.g., a first compartment **20** and a second compartment **22**. The seal **50** may be a crimp feature transversely arranged with respect to the longitudinal axis of the tube in a central portion **14** of the tubular body **14**. For example, crimp feature **50** may be formed by sealing or bonding opposing walls of the body, e.g., by adhesive, thermal bonding, pressure, or any combination thereof. Thus, the crimp feature **50** separates the body into the two compartments **20** and **22**, preferably such that the contents **220** of each compartment **20** and **22** are separated from each other.

When compartments **20** and **22** are filled with material, a portion **21**, **23** of each compartment approximately adjacent to the crimp feature may be tapered or radiused as shown in FIG. **1**. In preferred embodiments, adjacent ends **21** and **23** of each compartment have little or no curvature and are approximately linearly tapered from the collar **26** or a central portion of the compartment to the crimp feature **50**. As will be discussed in more detail below with respect to FIG. **7**, additional crimps, sleeves or other features may be longitudinally arranged on body to help resist or prevent bending about seal or crimp **50**.

As shown in FIG. **2**, the crimp feature **50** may be located in approximately the middle portion **14** of the tubular body **12**, such that compartments **20** and **22** are of approximately the same size and volume. In other embodiments, one or more crimp features **50** or other seals may be located off-center, e.g., more toward end **40-1** or **40-2**, such that the contents of compartments **20** and **22** are different from each other. For example, such an arrangement may be desirable when one compartment includes a material that is expected to be used more frequently or in greater dispensing quantities than the other compartment. As another example, a first compartment **20** may be larger and include a primary product and the second compartment **30** may be substantially smaller and contain a secondary product, such as for example a free sample, a concentrate, an activating agent, etc.

The cap **42** may be attached to or integrated with the collar **46** or other portion of end piece **40** or body **12**, and may include a lid **44** as shown in FIG. **2**. Lid may be hingeably attached, e.g., by a hinge feature **210**, to cap **42**. In such embodiments, lid **44** preferably may be selectively opened and closed over an opening **200** through which contents **220** of the container **10** may be dispensed, for example by opening the lid and squeezing the body **12** to force a portion of the contents **220** out of the body **12**. Lid **44** preferably includes a snap feature or other mechanism to help keep the lid secured over the opening **200** when not in use. In other embodiments, other cap or lid features may be used, e.g., e.g., flip caps, hinged caps, screw caps, or any combination thereof. Openings **200** and/or caps **42** on one end **40-1** may be of the same or different type and/or size than on the other end **40-2**. In preferred embodiments, cap **42**, collar **46**, or another portion of end piece **40-1**, or a corresponding portion body **12**, includes some marking, coloring or other indicia to distinguish end **40-1** from end **40-2**. Such indicia may be desirable, for example, to identify the contents of each compartment **20**, **22** and/or to identify the end **40-1** or **40-2** of the container **10** that belongs to, or is to be used, by a particular person.

End piece **40** may be of any desired configuration and may be united to the tube body **12** in any desirable manner. For example, as shown in FIG. **2**, collar **46** of end piece **40** may be tapered from the body **12** to cap **42**, and connect to or integrate with body **12** at an adjoining edge **246**. In some embodiments, end piece **40** is composed of a thermoplastic material and is formed by molding. End piece **40** is then fused to tube **10** in any acceptable manner known in the art. Alternatively, other materials, forming, and/or attachment methods may be employed.

As shown in FIG. **3**, body **12** may comprise a wall **310** approximately cylindrically arranged around a central cavity **330**, within which contents **210** are held. Contents **210** may be any liquid, gel, paste, powder, or other material capable of being dispensed from tube and through opening **200**. As described above, body **12**, and therefore central cavity **330**, may be divided into the two compartments **20**, **22** by crimp seal **50** or another sealing feature. Contents **210** in each compartment **20**, **22** may be the same or different from each other. Alternatively, central cavity **330** is not divided and is continuous from end **40-1** to end **40-2**.

In some embodiments, the inner periphery of neck **320** of end piece **40** surrounding opening **200** is molded into or otherwise fitted to provide a collet **324**. As used herein, the term "collet" is defined as a band, ferrule, flange or the like which is molded, stamped or otherwise provided around the inner diameter of the neck **320** at or near the terminus thereof. The dimensions of the collet diameter should therefore be smaller than the inside diameter of the neck **320**, and such collet **324** essentially defines the dispensing opening **200** or orifice located at or near the terminus of the neck **320**. Neck **320** may be integral with cap **42** as shown in FIG. **3**, or a cap **42** may be a separate structure and attached over the neck as shown for example in FIG. **4**.

The tubular container **10** may be fabricated from any suitable material and construction that permits the container to be at least temporarily squeezed or compressed to expel contents from one or both orifices **200**. For example, the container may have the form of a tube as illustrated and may be readily extruded from any appropriate synthetic plastic material, such as for example polyethylene, polyvinyl, polypropylene, polyethylene terephthalate and polyvi-

Document B2 – Prior Art D1 (8/9)

nyl chloride. In other embodiments the container **10** may be fabricated from one or more layers of synthetic plastic and/or other materials, such as for example, thin metals including aluminum, tin, lead, or the like. The container could also be a blow-molded container.

Tubular container **10** may have any desired dimensions, for example depending upon a particular desired application or use. For example, in one embodiments, container **10** is configured as a toothpaste container having an overall length of between about 4 inches and about 10 inches and a diameter of between about 0.5 inches and about 3 inches. Compartment **20** may have the same or different dimensions as compartment **22**.

The present invention contemplates the use of different types of squeezable tubes that are commercially available and which are suitable for dispensing products for consumer and professional use. Examples of different types construction for tubular containers include, for example: (1) tubes fabricated from a mono-layer of a plastic sheet material, preferably a thermoplastic material, e.g., polyethylene or polyvinyl; (2) tubes fabricated from a sheet or foil of metal, e.g., aluminum; or (3) tubes fabricated from one or more sheets of any of the above materials which are laminated into a single sheet. Such squeezable tubes may be adapted according to the present invention to include two or more dispensing orifices, e.g., on opposite ends of the tube, such that the single container may contain one or more products and/or safely be used by different individuals.

Referring in particular to FIG. **3**, wall **310** of body **12** may be of single layer or of laminated construction comprising several distinct layers bonded together. Generally, tube **10** may formed from a flat web or blank which has been fabricated in a preliminary operation, an example of which is one wherein one or more thermoplastic films are extruded directly onto and bonded to opposite sides of an endless intermediate substrate. By way of illustration and not limitation, tube body **12** can be made up of an inner thermoplastic layer, an outer thermoplastic layer and an intermediate barrier layer of metallic foil, e.g., aluminum, all coextensively bonded together. Additional layers may be used, including intermediate layers of paper and/or special bonding thermoplastic adhesives formulated to provide good adherence of the thermoplastic layers to the foil layer. The layers may also incorporate an oxygen barrier of which EVOH is an example. In this case, additional layers of adhesive may prove desirable to avoid the delamination of the walls. Additionally, one or more of the layers may include a regrind or even a post-consumer recycled plastic. Wall **310** may comprise any desired number of layers and have any desired thickness.

In some embodiments, tubes **10** may be formed by a tube manufacturer and shipped to a packer without the transverse divider or seal, such that the tube **10** may resemble the single-compartment tube **900** of FIG. **9**. Optionally, the manufacturer or packer may add a crimp seal or another divider before or after filling the tube, or the tube **10** may be left undivided as shown for example in FIG. **9**.

The contents **210** to be dispensed from each end **40** of container **10** may be the same or of alternate variety, and may include any personal, household or professional products, e.g., products for facial, oral, skin or hair care, lubricants, glues, sealants, paints, food, condiments and/or and other products. The products in a particular tube may be similar, but have different flavors, aroma or strength, such as products for adult or child, male or female, and whitening or sensitive teeth. The openings may be marked by different indicia, for example different colors (e.g., blue and pink), icons (e.g., adult and child) or descriptive text, for example such that two persons can share a single tube but still have individual dispensers. In other embodiments, different product which are commonly used together may be included in the same container, for example baby toothpaste and baby cream can be packaged as one unit, or hand cream for women and whitening toothpaste can be packaged as one unit, shampoos and conditioners, or shampoos and lotions could be combined, as well as adult and children sunscreen lotion.

Referring now to FIGS. **4-6**, a container **400** is similar to container **10**, e.g., including body **12**, ends **40-1** and **40-2**, compartments **20** and **22**, and crimp feature **50**. However, instead of the integral cap **42** of container **10**, container **400** includes a removable cap **420** to seal each end **40-1**, **40-2** of container **400**. Cap **420** may have threads or other features (not shown) that engage with corresponding threads **412** or other features on a neck **410** portion of the end piece **40**. Rotation of cap **420** in one direction engages the threads **412** and secures cap **420** to end, while rotation in an opposite direction loosens or removes the cap. Removing the cap exposes an opening or orifice in end piece **40**, through which the contents **610** or **620** of the compartments **20**, **22** may be dispensed. Alternatively, cap **420** may also include a lid or snap feature such as that shown in FIG. **2**.

In some embodiments, ends **40-1** and **40-2** may have different caps or cover features. For example, one end may have a flip cap and the other a screw cap. One or more of the caps may include color or other coding, labels, different sizes or geometries, locking features, etc. For example, in a particular embodiment, one end comprises a flip top or other easily accessible lid, while the other end includes a child-resistant cover. Such configuration may be desirable, for example, for containers that include separate products for children and adults, e.g., a whitening or medicated toothpaste and child's toothpaste.

As shown in the end-view illustration of FIG. **5**, cap **420** may include longitudinal ribs, ridges or other features to facilitate gripping of the cap by a hand. Body **12** may have a cross-sectional shape that is approximately oval as shown. Alternatively, body **12** may have a cross-sectional shape that is approximately circular, rectangular, or any other desired shape, and such shape may be uniform or variable throughout the length of body **12**.

Turning now to FIGS. **7** and **8**, in a preferred embodiment a tubular container **700** comprises one or more additional axial strengthening members **710** and **720** and/or other features to provide axial rigidity to the container **700**. For example, strengthening members **710** and **720** may be crimp features which are oriented an oblique angle or substantially perpendicular to the transverse seal **50**, such that the axial members provide resistance against bending about the transverse seal **50** a unless a deliberate bending force is applied to tube **700**. Such features may help allow

Document B2 – Prior Art D1 (9/9)

a dual-compartment product to be picked up and carried without the body **12** bending, twisting or otherwise altering its form. Aside from the axial members or other means for providing axial rigidity, container **700** may have some or all of the other features of container **10**, including dual ends **40-1** and **40-2**, caps **42** for each end, and one or more compartments **20** and **22** for holding material to be dispensed out of each end **40-1** and **40-2**. While container **700** may have increased axial rigidity due to axial members **710** and **720**, the body **12** of container is still preferably collapsible to allow expulsion of a desired portion of the contents of one or both compartments **20**, **22** through the corresponding openings **40-1** and **40-2**, respectively.

In other embodiments, container **700** may include an outer sleeve or sheath surrounding body **12** instead of or in addition to axial members **710** and **720**, for example such that container **700** may resemble in outer appearance container **900** of FIG. **9**. Such an outer sleeve or sheath may completely or partially surround body **12**, and may extend completely or partially towards ends **40-1** and/or **40-2**.

In alternative embodiment, the two compartments **20**, **22** of the body **12** are separately formed as conventional containers, e.g., toothpaste containers, and then combined into a single dual-dispenser product using an outer sleeve or other attachment means. Such an arrangement might be desirable, for example, for promotions where a smaller container (e.g., a trial-size) is packaged together with a primary product. Both products may be manufactured using whatever processes and equipment the manufacturer already has in place for each product, then packaged together with an outer tube, sheath or sleeve to make a final dual-dispenser product resembling that shown in FIG. **9**. Other means of attaching the ends of two containers may also be used instead of or in addition to an outer sleeve, for example an adhesive or crimp seal (e.g., such that the final product resembles that shown in FIG. **1**), or a clipping member with features for receiving and retaining the two separate containers (e.g., a clipping member dimensioned in an "H" fashion resembling the crimping features of FIG. **7**).

Referring to FIGS. **9** and **10**, a tubular container **900** may have a body comprising a single compartment **20** that is not divided into two separate containers by a crimp feature, seal, or other divider. All other features and aspects of container **900** may be the same or similar to those described above with respect to FIGS. **1-3**, including the various components, contents, fabrication materials and methods, etc. In some embodiments, container **900** may be filled with a single material **200**, e.g., any liquid, gel, paste, etc. that may be dispensed through either end **40-1** or **40-2**. Such a container may, for example, allow individuals in a household to share a single container of toothpaste, soap or other product, wherein each person accesses the material from a separate end **40-1** and **40-2**. As discussed above, caps **42** or other features of ends **40-1** and **40-2** may be color coded or otherwise labeled to denote contents or a particular user.

We claim:

1. A container, comprising:

a tubular body having a wall surrounding a central cavity;

a first end piece attached to a first end of the tubular body and having a first dispense orifice in communication with the central cavity for dispensing a first material from the central cavity; and

a second end piece attached to an opposite end of the tubular body from the first end, said second end piece having a second dispense orifice in communication with the central cavity for dispensing a second material from the central cavity, wherein the first end of the tubular body comprises a first indicium for distinguishing the first end from the opposite end.

2. The container of claim 1, wherein the first material and the second material are the same.

3. The container of claim 1, wherein the first material is different than the second material.

4. The container of claim 1, wherein the central cavity further comprises a first compartment and a second compartment, said first compartment in communication with the first dispense orifice for dispensing the first material, and said second compartment in communication with the second dispense orifice for dispensing the second material.

5. The container of claim 4, wherein the first compartment and second compartment are separated by a seal.

6. The container of claim 5, wherein the seal comprises a crimp feature joining two or more portions of the wall of said body.

7. The container of claim 5, wherein the seal is oriented transversely to a long axis of the container.

8. The container of claim 7, further comprising at least one axial member configured to resist bending of the body in at least one direction about the seal.

9. The container of claim 8, wherein the axial member comprises at least one crimp feature in the body, said crimp feature oriented in a direction substantially perpendicular to the orientation of the seal.

10. The container of claim 8, wherein the axial member comprises an outer sleeve surrounding at least a portion of the tubular body in an area of the seal.

11. The container of claim 4, wherein the first material and the second material are selected from the group consisting of a liquid, a semi-liquid, a gel, a paste, a cream and a powder.

12. The container of claim 11, wherein the first material is different than the second material.

13. The container of claim 12, wherein the first material is selected from the group consisting of a dentifrice, a lotion, a cleanser, a cosmetic, a shampoo, a conditioner, an ointment, a medication, a lubricant, an adhesive and a sealant.

14. The container of claim 4, further comprising the first material and the second material.

PAPER B: AMENDMENT OF A PATENT SPECIFICATION
03 October 2012, Wednesday
1330 – 1730 hrs

Maximum Time: 4 Hours (includes reading time) Maximum Marks: 100

Document C1: Client's Remarks and Instructions (1/2)

Dear Mike,

Thank you for sending the examination report and a copy of D1 referred to by the examiner. I am, however, not clear what document the examiner is referring to as "AAPA", as your letter did not include a copy of that document. Please let me have a copy as soon as possible.

I have never seen a dispensing tube like the one shown in D1 in the market. Perhaps the objections based on D1 can be disregarded on that basis?

Otherwise, I must say that our third embodiment described in my patent may not be anything special, since by bending the tube in D1, like the examiner says, one would pretty much get exactly the features of that embodiment. Also, I saw an advertisement from a company called EasyDispense in a trade magazine dated February 2010. They sell kits of two tubes of A and B components of a two component glue together with an elastic strap with velcro patches at one end, to put around the two tubes, so that the two tubes can be handled as if they were formed integral. I have attached a copy of the relevant page of the magazine for your reference. Of course, we may ignore this for the moment, since the examiner has not referred to it. Let me know what we have to do about this document.

On the other hand, I feel that my first and second embodiments are definitely unique compared to D1, and I do not understand how the examiner can say otherwise. I would very much like the patent to cover those two embodiments, but if that is not possible in your opinion, then I am happy if the patent at least covers the first embodiment. The design of the first embodiment currently accounts for about 60% of our revenue from dispensers, with 35% from the second embodiment, and only about 5% from the third design, and that contribution is further declining this year, from the projection thus far.

One thing I noticed is that we do not have any claims to the divided, hinged cap. This is becoming a big marketing feature in our campaign. It is very simple yet provides more flexibility and control of composition changes. One could even have two entirely different, multi-component toothpastes in the respective compartments and two people could use the same tube and still each have their respective favorite toothpastes. If possible, please make sure that

Document C1: Client's Remarks and Instructions (2/2)

there are some claims added for this, especially the option of using two different multi-component toothpastes in each compartment.

OK, that's all I can think of. Can you please prepare a draft response and send that to me, together with a cover letter explaining whether or not you agree with the examiner's assessment and why, and what solutions you are suggesting so that I can get protection as outlined above. I always find that this helps me understand the "legal jargon" you use in the response to the examiner. Please do deal with the objections based on the document "AAPA" from your end, as I will not have enough time to go through it in any detail, before we have to file the response. Also, please do explain whether the EasyDispense advertisement causes any problems and how we have to address them.

Regards,
Tom

Document C2: Article Found By Client (1/1)

EasyDispense Glue-Kit

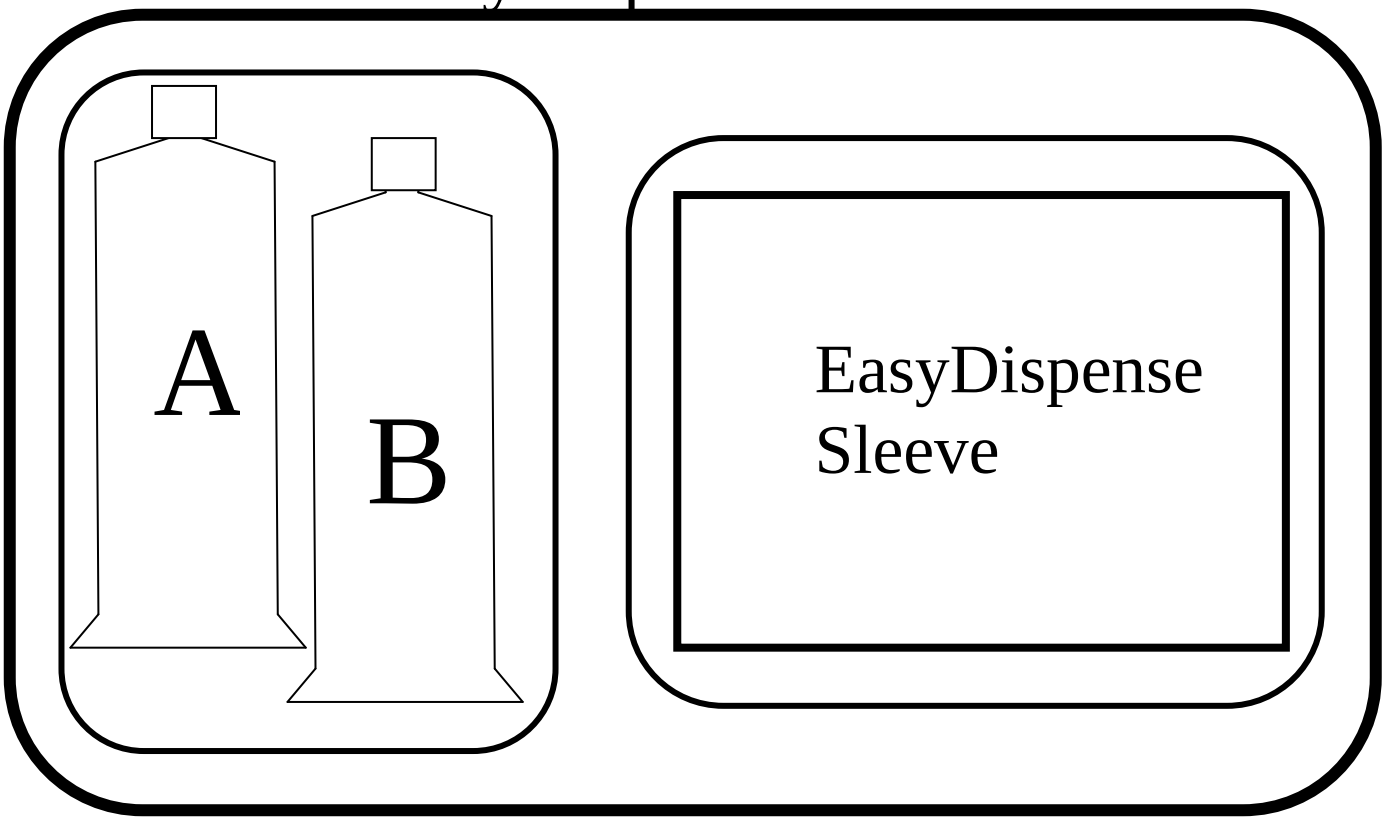

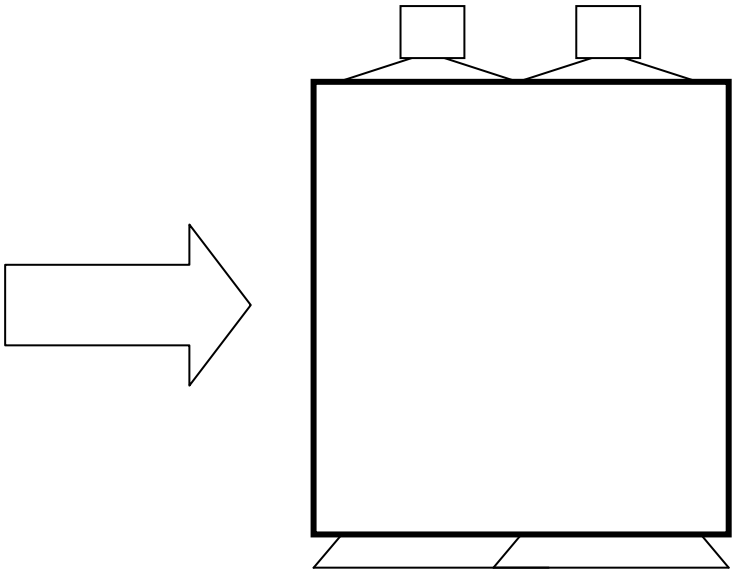

Unique EasyDispense Single Hand A+B Dispensing feature!!!!!!!!

End