INTELLECTUAL PROPERTY OFFICE OF SINGAPORE
PATENT AGENTS QUALIFYING EXAMINATION 2012

PAPER C: INFRINGEMENT AND VALIDITY OF SINGAPORE PATENT
4 October 2012, Thursday
1330 – 1730 hrs

Maximum Time: 4 Hours (includes reading time) Maximum Marks: 100

INTELLECTUAL PROPERTY
OFFICE OF SINGAPORE

INSTRUCTIONS TO CANDIDATES

1. This Paper consists of 23 pages, including this cover page.
2. Write your answers in English. Answers in any other language will not be marked. Answers in illegible handwriting will not be taken into consideration.
3. Only your answers and/or drawings to the question(s) written in the Answer Booklet(s) provided by the Examination Secretariat will be considered. You are to write on one side of each sheet in the Answer Booklet(s).
4. Marks are awarded more for the points selected for discussion and reasoning displayed than for conclusions reached.
5. Information provided in the question(s) may be obtained from actual situations or modified therefrom for the purpose of this examination. You should accept the facts given in the papers. Assume also that the prior art given is exhaustive.
6. Advise the client on infringement and validity of his invention and on the other questions asked by him. Your advice can be in the form of notes or a letter to the client but in either case you must provide the reasons for your advice.

To be continued

PAPER C: INFRINGEMENT AND VALIDITY OF SINGAPORE PATENT
4 October 2012, Thursday
1330 – 1730 hrs

Maximum Time: 4 Hours (includes reading time) Maximum Marks: 100

7. The documents provided in the question are:

(a) Letter from your Client including question (3 pages);

(b) Document A - HandyCase product advertisement (2 pages);

(c) Document B – Singapore patent no. 1001 ("SG01") (8 pages);

(d) Document C – US Patent 2001/0000123 A1 ("US23") (7 pages);

(e) Document D – Standard mobile phone case description and drawing (1 page).

End

PAPER C: INFRINGEMENT AND VALIDITY OF SINGAPORE PATENT
4 October 2012, Thursday
1330 – 1730 hrs

Maximum Time: 4 Hours (includes reading time) Maximum Marks: 100

Letter from your Client (1/3)

You are a patent agent working in a law firm. One of your long-established clients is ShiokCases Pte Ltd.

You receive a letter from ShiokCases as follows:

7 October 2012

Dear Patent Agent,

As you know, in August 2010, ShiokCases developed a new case for a mobile phone, which incorporated a secret compartment for storing credit cards or similar-sized valuable objects or identity cards.

By November 2010, ShiokCases had manufactured the new cases and began to market them in Singapore, under the name HandyCase™.

A document describing the HandyCase™ ("Doc A") is enclosed. The beauty of our phone case is that it allows storage of a credit card or ID card or similar, but leaving at least a section of the credit card or ID card exposed to allow easy access. It is even possible to allow the card to be read, for example by a card reader, without full removal of the card being necessary. This has obvious advantages, in that the cards are easily removed and used, whilst still being stored snugly with the phone. The user only needs to pick up one object when heading out for lunch, containing their phone as well as paper money or credit cards, without the need for a bag or even a pocket in their clothing.

Another advantage of our HandyCase is the material – our case is formed from non-magnetising lightweight material such as aluminium, which provides protection for the magnetic strip of the credit card from any radiation emitted by the mobile phone. Also, edges of the HandyCase leading to the card compartment are made thicker.

PAPER C: INFRINGEMENT AND VALIDITY OF SINGAPORE PATENT
4 October 2012, Thursday
1330 – 1730 hrs

Maximum Time: 4 Hours (includes reading time) Maximum Marks: 100

Letter from your Client (2/3)

ShiokCases Pte Ltd is a small company. The HandyCase is our first product and sales so far have been very successful.

To our surprise and annoyance, we have today received a letter from a company called PhoneMe Pte Ltd, stating that our HandyCase™ products infringe their Singapore patent no 1001 ("Document B" or "SG01") and they intend to take further action against us. We have also been informed by some of our retailers selling our HandyCase product that they also received a letter from PhoneMe, telling them that the HandyCase is an infringing product. We are very concerned about the impact on our sales. We were not previously aware of the PhoneMe patent. PhoneMe is requesting that we stop selling HandyCase products immediately, and pay damages for past sales.

Unlike our small company, PhoneMe is a very large, multinational company, whose products are sold in many outlets in Singapore and internationally.

We do not believe their patent is valid. After all, anyone could take a standard phone case, like the one shown in "Document D" and slip a credit card inside. All we are doing is making card storage a bit easier. In any case, we have also identified another prior art document, "Document C" or "US23". Document C is a US patent application that published before the filing date of SG1001, and describes a phone case and wallet combined.

Our CEO wants to write back to PhoneMe and let them know our opinion that their patent is not valid and that we will not be taking any further action, but before he writes the letter I just want to check with you whether there are any outstanding issues we need to consider or any action we need to take.

Yours faithfully,
Mr I. Phone
General Counsel, ShiokCases Pte Ltd

PAPER C: INFRINGEMENT AND VALIDITY OF SINGAPORE PATENT
4 October 2012, Thursday
1330 – 1730 hrs

Maximum Time: 4 Hours (includes reading time) Maximum Marks: 100

Letter from your Client (3/3)

Please write a memo explaining the following with reasoning and in detail:

- your opinion as to whether the HandyCase infringes patent SG1001;
- your opinion as to whether SG1001 is valid;
- whether ShiokCases can take any action to improve their position;

You need not consider any action which requires filing an action at a Court (although you may consider actions involving IPOS).

PAPER C: INFRINGEMENT AND VALIDITY OF SINGAPORE PATENT
4 October 2012, Thursday
1330 – 1730 hrs

Maximum Time: 4 Hours (includes reading time) Maximum Marks: 100

Document A: Advert for the HandyCase™ Wallet/Phone Case ("DocA") (1/2)

First Date of publication of advertisement: 1 November 2010

Picture source: ©TRTL BOT 2012

PAPER C: INFRINGEMENT AND VALIDITY OF SINGAPORE PATENT
4 October 2012, Thursday
1330 – 1730 hrs

Maximum Time: 4 Hours (includes reading time) Maximum Marks: 100

Document A: Advert for the HandyCase™ Wallet/Phone Case ("DocA") (2/2)

New HandyCase™: a lightweight, practical protective case for a mobile phone, and a credit card or ID card. The case is formed from non-magnetising material such as aluminium to provide protection for the magnetic strip of the credit card.

A section of the credit card or ID card is exposed to allow easy access and, in some circumstances, to allow the ID card to be read without full removal of the card being necessary.

PAPER C: INFRINGEMENT AND VALIDITY OF SINGAPORE PATENT
4 October 2012, Thursday
1330 – 1730 hrs

Maximum Time: 4 Hours (includes reading time) Maximum Marks: 100

Document B: Singapore patent no. 1001 ("SG01") (1/8)

Singapore patent no. 1001 ("SG01")
Patentee: PhoneMe Pte Ltd
Application date: 1 March 2009
Publication date: 1 September 2010
No priority claim
Date of grant: 1 October 2011

MOBILE PHONE CASE

The present invention relates to a case for a mobile phone or other hand held electronic device.

Mobile phone cases are known that are capable of holding a phone and protecting the phone from surface damage, such as scratches, and from more serious damage that could occur if an unprotected phone was dropped or prone to a shock. Such cases can be made from varying materials, such as leather or metal, or silicon rubber covers.

If a mobile phone user is not carrying a handbag or briefcase, the user may need to carry both a mobile phone and a wallet in their hands or in pockets of their clothing and users of a phone may find that items could be stolen or mislaid, if too many items are carried. Accordingly, there is a need for a suitable carrying case for a mobile phone and items that might be carried in a wallet. However, phone cases are generally preferred if they are thin walled and of minimal bulk. In view of their close fitting characteristics and decorative nature, phone cases are generally not amenable to other uses.

STATEMENT OF THE INVENTION

In one aspect of the present invention there is provided a case for a mobile phone or other hand held electronic device, configured to closely conform to the shape of the device and having apertures and cutouts in registration with corresponding elements of the device, in

Document B: Singapore patent no. 1001 ("SG01") (2/8)

which the case comprises an outer wall configured to conform to the device and a storage element within the wall.

The case is moulded or formed to hold a phone snugly enough that the phone will not fall out from the case. Phones are designed to have access elements, or ports, to allow cables to be connected to the phone. For example, headphones, battery chargers and the like may need to be connected to the phone. Accordingly, the case of the present invention provides for access elements that match with corresponding elements of the device.

The present invention is further shown in the drawings in which:

SHORT DESCRIPTION OF THE DRAWINGS

FIG. 1 is a front perspective view of a cell phone case, with cards, shown in dashed lines, as being inserted/removed;

FIG. 2 is a rear view of the cell phone case of FIG. 1 more clearly showing a card insertion slot;

FIG. 3 is a left side elevation view respectively of the cell phone case of FIG. 1;

FIG. 4, depicts a cell phone case with co-extensive and adjacent walls configured to provide a full independent pocket;

DETAILED DESCRIPTION OF THE INVENTION

Hand held electronic devices such as mobile phones, generally have dimensions adequate to provide an acceptable size for a viewing screen and to enable user controls, while remaining sufficiently small enough to be carried in a jacket or shirt pocket or a small hand-held bag.

Document B: Singapore patent no. 1001 ("SG01") (3/8)

The case is configured to have an outer wall that snugly peripherally encloses the housing of the electronic device but that does not cover the viewing screen of the device, and to have a decorative or protective wall of the case that covers the back or obverse side of the hand held device relative to the screen.

The case further comprises a pocket element within the wall. Advantageously, the pocket element is able to house at least one credit, debit or ATM card, or similar sized article, for example an ID card, or paper currency. The pocket element may comprise a slot that allows for insertion and removal of the card.

The slot opening may be positioned on at least one side of the case or the rear of the case. The opening should be of dimensions to permit insertion of cards or other objects having the dimensions of a typical credit, debit, ATM card or driver's license or an ID card. The pocket may be designed to allow a card or other object to be inserted in either lengthwise or edgewise. The slot has sufficient flexibility to permit insertion of an object with stretching.

In one embodiment, an outer case wall is provided that covers an inner case wall with the latter covering the rear of the hand held device. The pocket element is accordingly formed between the outer and inner case walls.

In one embodiment, the case includes a magnetically protective element, capable of protecting a card having a protective strip. For example, the element could comprise a thin layer of protective material, which is disposed between the wall closest to the phone and the pocket holding the card. The element thus allows, for example, a credit card to be stored in the case next to the phone whilst limiting the potential for damage to the magnetic data storage elements of the credit card.

The slot may have a reinforced end, to protect the case from damage caused by repeated insertion and removal of a card from the pocket.

Document B: Singapore patent no. 1001 ("SG01") (4/8)

Ideally, the pocket is such that the card is completely hidden from view in the case, and this allows additional security for the user against an increased risk of theft of both a credit card and phone, compared to a phone on its own. This also has an advantage that the cards are also held more securely in the slot and are less likely to fall out.

To allow access to items stored within the pocket, the case may be provided with an extraction assisting element, such as a central aperture 12b in the rear wall of the case, whereby a user can place a finger through the aperture to at least partially slide contained cards, paper money and other thin items through the insertion slot for removal by exposed edge grasping.

In one embodiment, the case is formed from flexible resilient material, allowing a card or other object to be held snugly in the pocket element. An example of a material that can be used is silicon rubber. Silicon rubber has properties that include shock-absorption, to protect the telephone. Silicon rubber is flexible so that cards can be more easily accessed. Additionally, silicon rubber can be moulded to hold the phone snugly, while still being flexible enough to allow a user to easily change the case for the phone if required.

With specific reference to the drawings, FIGS. 1 and 2 show a case 10 customised to the shape of an electronic device such as an iPhone® or Blackberry®.

As shown in FIG. 3, side wall 10a is provided with a longitudinal slot 10' for insertion of a card or paper money. FIG. 1 shows the interior surface of rear wall 12 being provided with a recess 12a sized to accommodate at least one credit or similar sized card 1 with standard card dimensions, and/or paper money 2.

The longitudinal insertion/removal is shown in FIGS. 1 and 2, with the card(s), money and the like being positioned and held between the rear of the device and the rear wall 12 of the case. Alternatively, in FIG 3, the top 13 or bottom 14 (if there is sufficient room relative to a charging port 23) may be provided with a lateral slot (not shown) for edgewise insertion of card 1 therethrough.

Document B: Singapore patent no. 1001 ("SG01") (5/8)

As shown in FIGS. 1 and 2, the centre of the recess 12a is provided with an access aperture 12b which provides thumb (or other finger) access to the cards and other items contained therein to assist or facilitate sliding removal thereof. Though the access aperture may be positioned anywhere adjacent the card 1, it is preferred that it is centrally located to prevent skewing of the card during removal and sliding out of the longitudinal slot 10'.

If desired, a separate pocket may be formed such as schematically shown in FIG. 4, by covering recess 12a as in FIG. 1, with a wall 12c, wherein cards and bills may be contained between such wall and outer wall 12. Alternatively, an additional outer wall may be grafted onto the outer wall 12 and apertured accordingly to permit external access to the contained cards and bills. With an enclosing pocket the wall closest to the contained cell phone is preferably made of a magnetically protective material to protect magnetic strips of contained cards from being affected by magnetic fields within the cell phone.

The pocket that holds the actual money and cards may be made of or lined with a material that allows the cards to slip out easily such as a canvas type material.

Alternatively, the pocket may be an additional pocket that sits on the outside of the actual case as an add on, and made of the same type of material to ensure that the money and cards are easily placed in and removed from the case and built out of a material that allows the money and cards to slip in and out easily enough. When the pocket is internal as described above, the lip on the opening is preferably hardened and bevelled to ensure that paper money and cards do not slip out on their own but with actual force with a user's hand. In addition a securing mechanism, e.g., hook and eye connectors, clips, snap buttons, magnet and or other type of securing mechanism may be used to ensure that the money and /or cards do not slip out inadvertently.

Alternatively, and advantageously from a manufacturing standpoint, as shown in FIGS. 2 and 3 the longitudinal slot 10' is moulded directly with the formation of the case and has walls which are spaced at their ends 10". The separation between walls of longitudinal slot 10' resists tearing and slot length propagation to maintain integrity of the case and its holding

Document B: Singapore patent no. 1001 ("SG01") (6/8)

receptacle.

It is understood that the above description and drawings are merely exemplary of the present invention and that changes in structure, elements, materials, dimensions and the like, such as formation of the pocket within the device itself, may be made without departing from the scope of the present invention as defined in the following claims.

CLAIMS

1. A case for a mobile phone or other hand held electronic device, configured to closely conform to the shape of the device and having apertures and cutouts in registration with corresponding elements of the device, in which the case comprises an outer wall configured to conform to the device and a pocket element within the wall.

2. A case according to claim 1, in which the pocket element is configured to house a credit card and in which the pocket element has a slot for insertion and removal of the card.

3. A case according to claim 1 or 2, in which the case includes a magnetically protective element, capable of protecting a card having a magnetic strip.

4. A case according to claim 2 or 3, in which the slot comprises a reinforced end.

5. A case according to any of claims 1 to 3, in which the case is formed from flexible resilient material, allowing a card or other object to be held snugly in the pocket element.

PAPER C: INFRINGEMENT AND VALIDITY OF SINGAPORE PATENT
4 October 2012, Thursday
1330 – 1730 hrs

Maximum Time: 4 Hours (includes reading time) Maximum Marks: 100

Document B: Singapore patent no. 1001 ("SG01") (7/8)

FIGURE 1

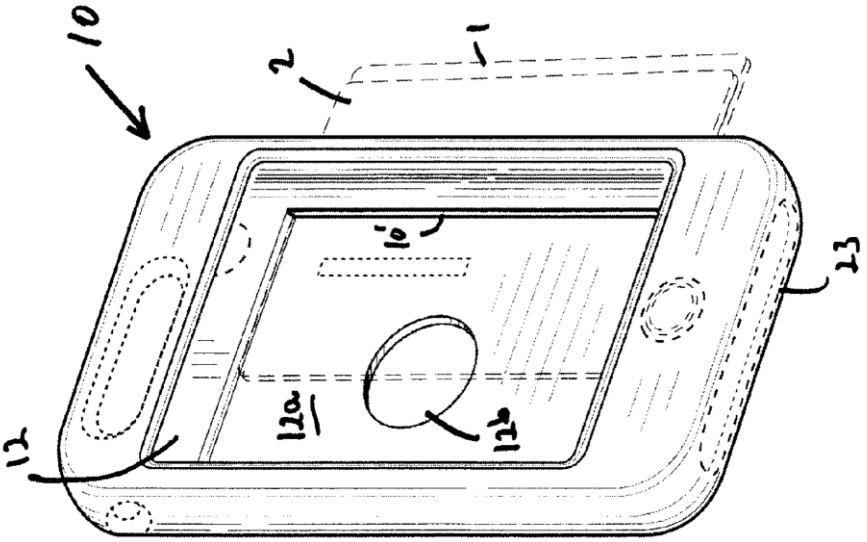

FIGURE 2

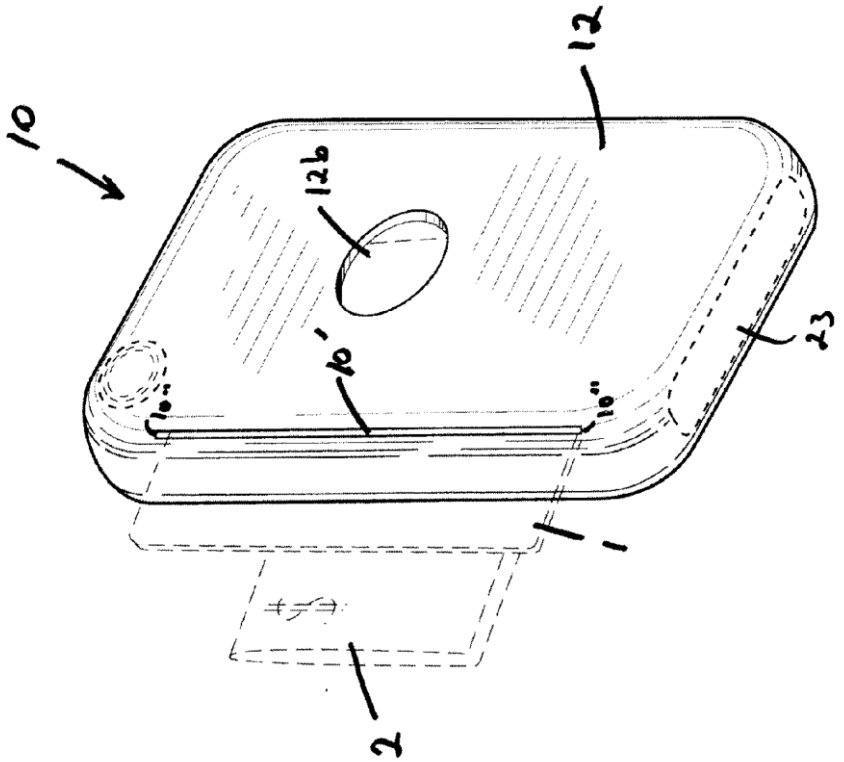

PAPER C: INFRINGEMENT AND VALIDITY OF SINGAPORE PATENT
4 October 2012, Thursday
1330 – 1730 hrs

Maximum Time: 4 Hours (includes reading time) Maximum Marks: 100

Document B: Singapore patent no. 1001 ("SG01") (8/8)

FIGURE 3

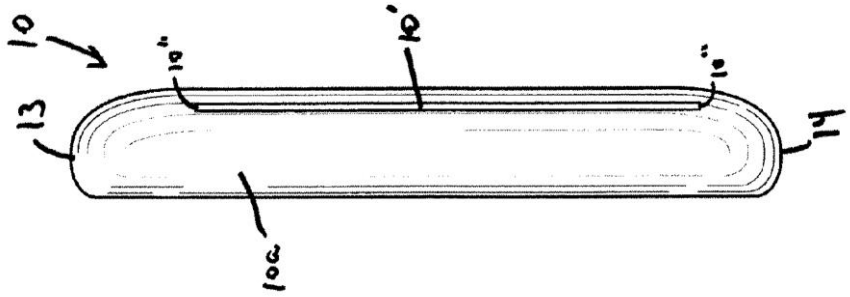

FIGURE 4

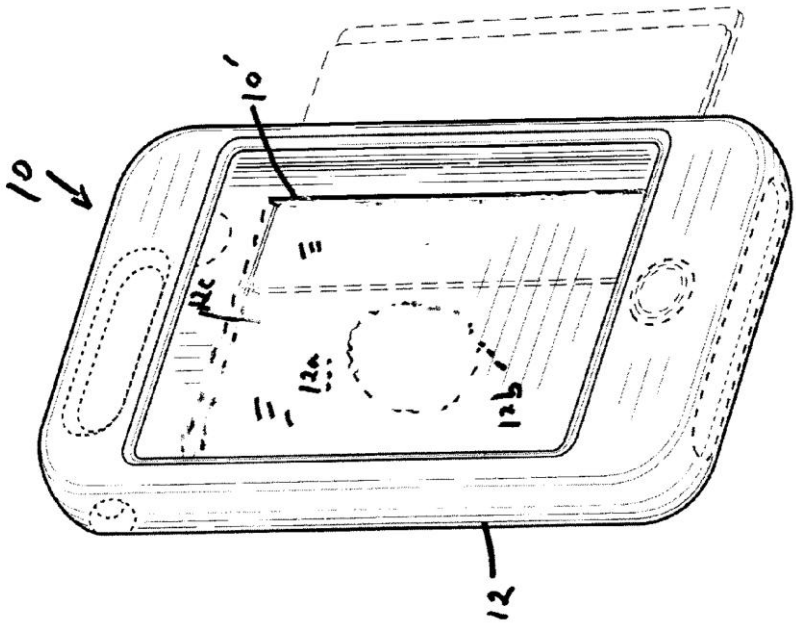

[copyright notice: source of drawings is US2010/0230301]

PAPER C: INFRINGEMENT AND VALIDITY OF SINGAPORE PATENT
4 October 2012, Thursday
1330 – 1730 hrs

Maximum Time: 4 Hours (includes reading time) Maximum Marks: 100

Document C: US Patent 2001/0000123 A1 ("US23") (1/7)

US Patent Application Publication No. 2001/0000123 A1 ("US23")

Publication date: 1 January 2001

WALLET / HANDBAG WITH EXTERNAL PHONE POCKET

BACKGROUND

[0001] This invention relates to a wallet or handbag for storing personal items, particularly to a wallet/handbag with an external phone pocket for providing quick unobstructed access to a mobile phone.

[0002] Typically, handbags are used to carry personal items, e.g. small purse/wallet, keys, cosmetics, mobile phones, etc. These handbags generally have a single large compartment to retain the user's personal items. To locate a needed item, a user is required to search through the aggregated personal items in the single compartment. This can be time-consuming and frustrating if an item is needed quickly.

[0003] In recent times, mobile phones have become indispensable in personal and business communication as well as for personal safety considerations. A mobile phone user is often expected to attend to his/her mobile phone immediately and hence any delay in having to search for a mobile phone may be detrimental to the user. Accordingly, mobile phones require a convenient and handy means for storage and transport which allows quick access when needed.

DETAILED DESCRIPTION

[0004] FIG. 1 and FIG. 2 show one embodiment of a wallet/handbag 10 according to the present invention. The wallet/handbag 10 has a rectangular box-like body 11 having a front wall 12, a rear wall 13, a pair of side walls 14, a bottom wall 15, and a top wall 16. The body 11 may be formed of leather or a polyvinyl chloride (PVC) type material which is stitched or otherwise secured together in a manner familiar to those skilled in such art. As

Document C: US Patent 2001/0000123 A1 ("US23") (2/7)

shown in FIG. 1, the wallet/handbag 10 comprises a front compartment 20 and a rear compartment 30. Each compartment 20, 30 has closure means, e.g. zipper-type fasteners 17 to allow or prevent access to the interior of the compartment 20, 30.

[0005] The wallet/handbag 10 is further provided with a front external pocket 21 which is sized and arranged to snugly receive a mobile phone 40. The front external pocket 21 includes a substantially-elastic phone holding means for removably securing the mobile phone to the body of the wallet/handbag 10. The front external pocket 21 is attached, preferably by stitching or other like methods, to the front wall exterior surface 18 of the body 11. To provide the aforementioned snug fit, and to accommodate mobile phones 40 having various contours and widths, the front external pocket 21 may be made substantially entirely of a substantially elastic yet resilient material such as, but not limited to, a nylon-type material. The use of a substantially elastic yet resilient material for substantially the entire front external pocket 21 provides a comparatively large surface area in contact with the inserted mobile phone case. Thus, the friction and gripping action from this large surface contact securely holds the mobile phone 40 within the front external pocket 21. As will be appreciated by those skilled in such art, by providing the body 11 with a substantially elastic front external pocket 21, the user may quickly and easily have access to the phone 40, especially in cases of emergencies, without having to rummage and search through several items. The front external pocket 21 may be provided with openings (not shown) through which cables can be attached to a mobile phone held therein. For example, openings may be provided through which a headphone cable can connect to a headphone socket of the mobile phone, allowing a user to, for example, listen to a telephone call or music whilst the mobile phone is held in the pocket.

[0006] FIG. 3 shows a rear external pocket 31 which is attached, preferably by stitching, to the rear wall exterior surface 19 of the body 11. A belt loop 32 is attached by stitching or other like methods to the rear external pocket exterior surface 33. The belt loop 32 is used to attach the body 11 to the user's belt 34 to provide convenient hands-free carrying of the wallet/handbag 10.

PAPER C: INFRINGEMENT AND VALIDITY OF SINGAPORE PATENT
4 October 2012, Thursday
1330 – 1730 hrs

Maximum Time: 4 Hours (includes reading time) Maximum Marks: 100

Document C: US Patent 2001/0000123 A1 ("US23") (3/7)

[0007] FIG. 4 shows the wallet/handbag 10 with the front and rear compartments 20, 30 in a substantially closed position where access to both compartments 20, 30 is prevented, and with the mobile phone 40 placed within the front external pocket 21. FIG. 5 shows the wallet/handbag 10 in which the front and rear compartments 20, 30 are in a substantially open position where access to the contents contained in each of the compartments 20, 30 is allowed.

[0008] FIG. 6 shows an arrangement of the front compartment 20 having at least a first pocket 22. The front compartment 20 may also be provided with an insert 100 having a first end portion 103 which is sized and arranged for removable placement within the first pocket 22, and a second end portion 104 having a plurality of insert pockets 105 which are sized and arranged to receive credit card-type items (not shown). The insert 100 may be formed of a PVC-type material.

[0009] FIG. 7 shows an arrangement of the rear compartment 30 having a plurality of pockets 110, 111, 112 which are sized and arranged to hold personal items (not shown), e.g. currency bills, coins, keys, loose articles.

[0010] Other embodiments will be apparent to those skilled in the art from consideration of the specification and practice of the invention.

[CLAIMS OMITTED]

PAPER C: INFRINGEMENT AND VALIDITY OF SINGAPORE PATENT
4 October 2012, Thursday
1330 – 1730 hrs

Maximum Time: 4 Hours (includes reading time) Maximum Marks: 100

Document C: US Patent 2001/0000123 A1 ("US23") (4/7)

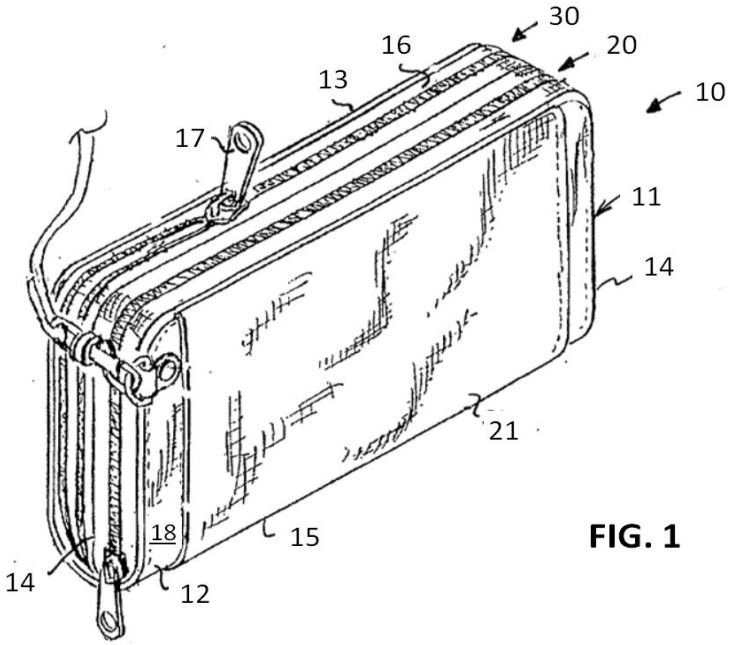

FIG. 1

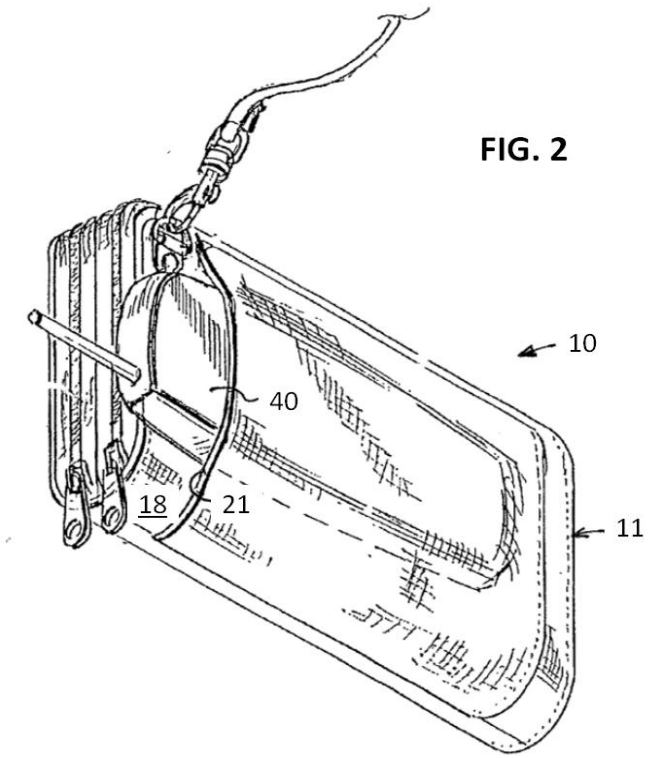

FIG. 2

PAPER C: INFRINGEMENT AND VALIDITY OF SINGAPORE PATENT
4 October 2012, Thursday
1330 – 1730 hrs

Maximum Time: 4 Hours (includes reading time) Maximum Marks: 100

Document C: US Patent 2001/0000123 A1 ("US23") (5/7)

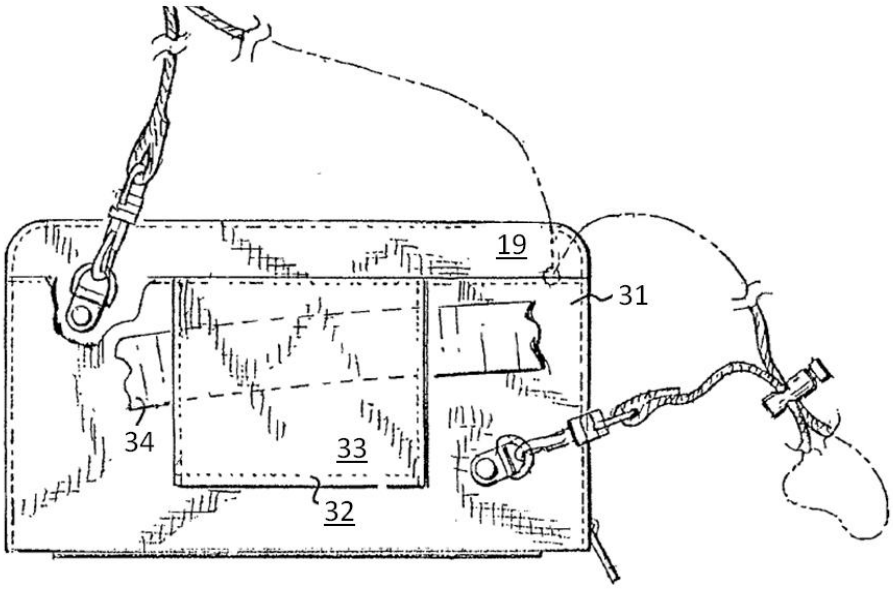

FIG. 3

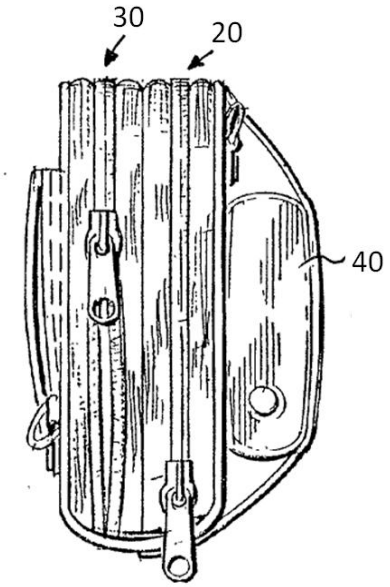

FIG. 4

PAPER C: INFRINGEMENT AND VALIDITY OF SINGAPORE PATENT
4 October 2012, Thursday
1330 – 1730 hrs

Maximum Time: 4 Hours (includes reading time) Maximum Marks: 100

Document C: US Patent 2001/0000123 A1 ("US23") (6/7)

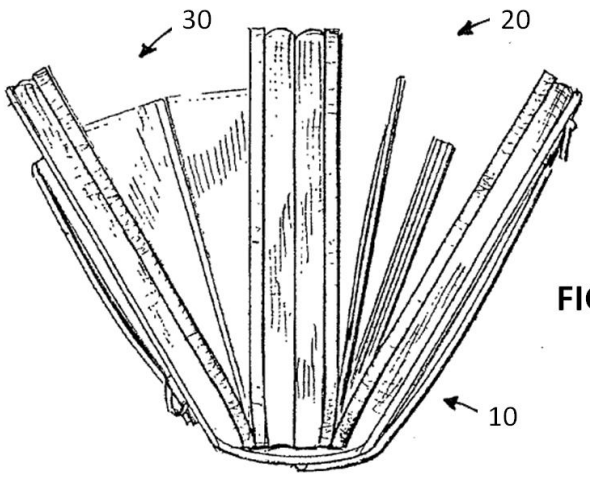

FIG. 5

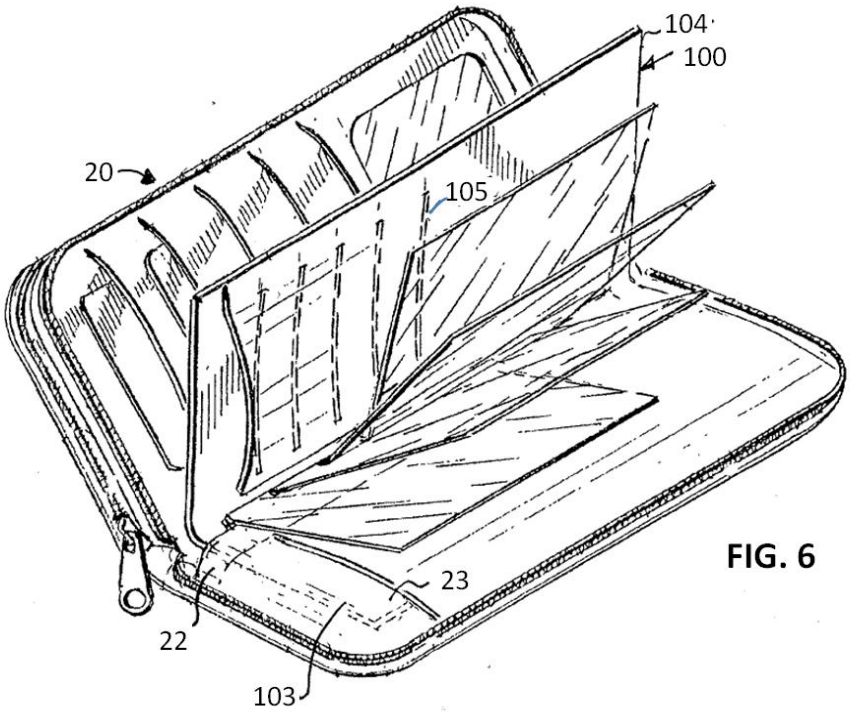

FIG. 6

PAPER C: INFRINGEMENT AND VALIDITY OF SINGAPORE PATENT
4 October 2012, Thursday
1330 – 1730 hrs

Maximum Time: 4 Hours (includes reading time) Maximum Marks: 100

Document C: US Patent 2001/0000123 A1 ("US23") (7/7)

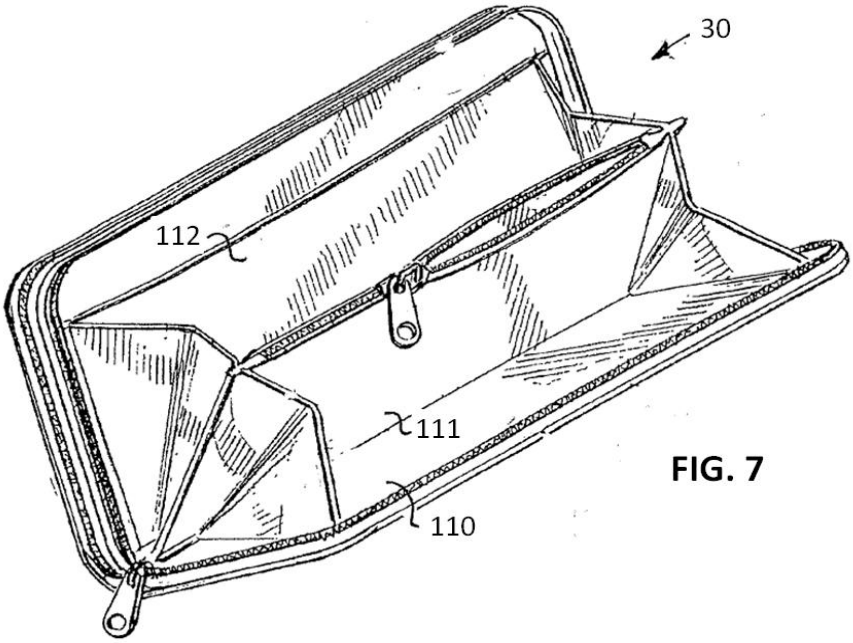

FIG. 7

[copyright notice: original source of figures is US 2001/0027834A1]

PAPER C: INFRINGEMENT AND VALIDITY OF SINGAPORE PATENT
4 October 2012, Thursday
1330 – 1730 hrs

Maximum Time: 4 Hours (includes reading time) Maximum Marks: 100

Document D: Standard Mobile Phone Case Description and Drawing ("Doc D") (1/1)

Publication date: 1 February 2009

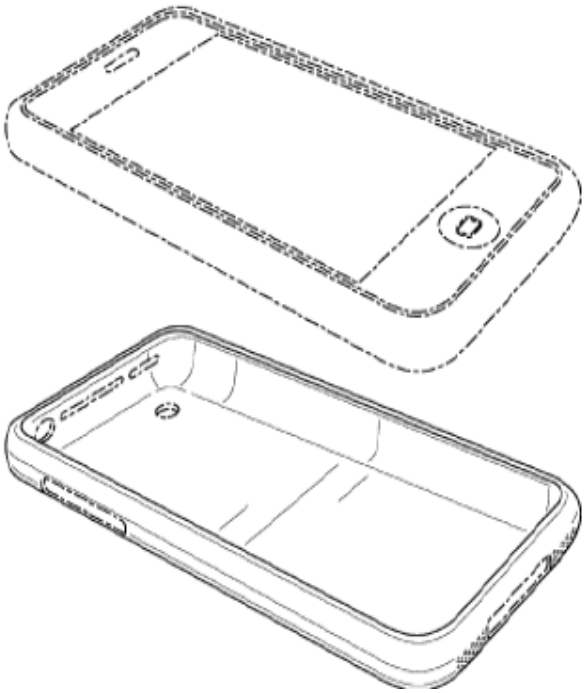

This snap-on leather finish case (picture: bottom) keeps your mobile phone (picture: top) safe and protected in style from scratches and shocks. The leather finish case adds a touch of luxury. Allows easy access to all buttons, controls and ports. Easy to snap-on and snap-off as required. Easy to grip, and elegant in design. The case is optionally inbuilt with a metal lining. Material: Hard plastic case with genuine or faux leather finish. Colours: Cranberry Red, and Cobalt Blue. Size: Perfect fit.

[Copyright notice: original source of drawings is US D622,716]

End