INTELLECTUAL PROPERTY OFFICE OF SINGAPORE
PATENT AGENTS QUALIFYING EXAMINATION 2012

PAPER A: PREPARATION OF A PATENT SPECIFICATION
2 October 2012, Tuesday
1330 – 1730 hrs

Maximum Time: 4 Hours (includes reading time) Maximum Marks: 100

INTELLECTUAL PROPERTY
OFFICE OF SINGAPORE

INSTRUCTIONS TO CANDIDATES

1. This Paper consists of 11 pages, including this cover page.

2. Write your answers in English. Answers in any other language will not be marked. Answers in illegible handwriting will not be taken into consideration.

3. Two copies of the question paper are provided, one is for your reading and the other is for your use (optional) when answering the question(s) in the Answer Booklet(s).

4. Only your answers and/or drawings to the question(s) written or glued in the Answer Booklet(s) provided by the Examination Secretariat will be considered. You are to write on one side of each sheet in the Answer Booklet(s).

5. Information provided in the question(s) may be obtained from actual situations or modified therefrom for the purpose of this examination. You should accept the facts given in the paper. Assume also that the prior art given is exhaustive.

6. The document provided in this question is:

   Document A – Client's write-up of his invention (4 pages of description including question and Prior Arts; and 6 pages of drawings).

End

PAPER A: PREPARATION OF A PATENT SPECIFICATION
2 October 2012, Tuesday
1330 – 1730 hrs

Maximum Time: 4 Hours (includes reading time) Maximum Marks: 100

Document A – Client's write-up of his invention (1/10)

There are many circumstances in which it is required to connect a cylindrical shaft firmly to another body (called a "hub"), so that mechanical force can be transmitted between them. The force may be rotational (i.e. around the axis of the shaft) or translational (e.g. parallel to the shaft axis). For example, a wheel of a car is firmly connected to an axle, such that rotational force from the axle is transmitted to the wheel.

One known way of connecting a shaft to the hub is using a screw. This method is shown in Fig. 1(a) and 1(b). The shaft is shown as 31. A threaded hole 32 is provided in the shaft 31. For example, as shown in Fig. 1(a), the hole 32 may be at the end of the shaft 31, on and parallel to the axis of the shaft. The hub is shown as 33. A through-hole 34 is provided in the hub 33. The screw is shown as 36. It has a head 37 larger than the hole 34 in the hub 33, and a threaded body 35 for engagement with the threaded hole 32 in the shaft 31. The threaded body 35 is passed through the through-hole 34 in the hub, and the threaded body 35 enters the threaded hole 32 in the shaft 31. As the screw 36 is tightened into the hole 32 in the shaft 31, the hub 33 is firmly squeezed between the shaft 31 and the head 37 of the screw 36. This is shown in Fig. 1(b), which is a cross-sectional view.

This method only works if the shaft contains a threaded hole at the position where the hub is to be attached to it. In a typical situation, the shaft and hub are manufactured by different organizations with no knowledge of each other, or of the person whose task it is to connect them (who typically is not part of either organization), and the organization which manufactures the shaft does not include a threaded hole in the shaft. Furthermore, the method is not suitable in situations in which, for some mechanical reason, it is not convenient to provide such a shaft with a threaded hole.

Another known method is to inject a liquid resin composition into a gap between the shaft and the hub, and then to cure the resin to harden it. This does not require any hole in the shaft, but it has other disadvantages, such as that the connection strength between the hub and shaft may be insufficient.

PAPER A: PREPARATION OF A PATENT SPECIFICATION
2 October 2012, Tuesday
1330 – 1730 hrs

Maximum Time: 4 Hours (includes reading time) Maximum Marks: 100

Document A – Client's write-up of his invention (2/10)

Our proposal for connecting a shaft to a hub is illustrated schematically in Fig. 2. As shown in Fig. 2(a), the shaft 1 is generally cylindrical with diameter d_1. It has a central axis 2. The hub 3 is drawn as generally planar (of course, it may in reality be any shape), having a central through-hole 4. The hub is arranged so that the direction through the through-hole 4 is on the axis 2. The hole 4 has a circular cross-section at all points along the axis 2, but it has a smaller diameter d_2 at one end, and a larger diameter d_3 at the other ($d_3>d_2>d_1$). That is, the hole 4 gradually becomes narrower in the left-to-right direction of Fig. 2(a). Thus, the concave, inwardly-facing surface of the hole 4 is approximately conical, but lacks the tip of the cone. Engineers refer to such a shape as "frusto-conical". There are two screw-threaded through-holes 7 in the hub.

The shaft 1 and hub 3 are connected using a connection element 5, shown in Fig. 2(b). The element 5 is formed of deformable material, and has a circular through-hole 6 of constant internal diameter d_4. $d_4>d_1$, so that the shaft 1 fits into the through-hole 6. The element 5 has a frusto-conical outer surface 17. A first end of the outer surface 17 has a diameter d_5, and the second end of the outer surface 7 has diameter d_6. $d_6>d_5$, $d_6>d_2$ and typically $d_5>d_2$.

The shaft 1 is threaded through the hole 6. The element 5 is then forced into the through-hole 4 (we discuss one of the ways of doing this below). This is shown in cross-section in Fig. 2(c), where the arrows show the direction of the force on the element 5. As the element 5 is pushed to the right, it is compressed against the inner surface of the hole 4, and deformed inwardly, as shown in Fig. 2(d). Soon it is pressed against the outer surface of the shaft 1. This creates strong friction between the element 5 and each of the shaft 1 and hub 3, so that the shaft 1 becomes firmly connected to the hub 3.

As shown in Fig. 2(a), the hub 3 can have two threaded through-holes 7, and, as shown in Fig. 2(e), the element 5 can be driven into the hole 4 by screwing two standard screws 8 into the holes 7, such that the heads 9 of the screws 8 press on the element 5. This is illustrated in cross-section in Fig. 2(e). The element 5, as well as the screws 8, are available in any workshop.

A disadvantage of the arrangement above is that it is only suitable for a certain sorts of hubs, i.e. ones with a cavity shaped like hole 4, and having through-holes 7 (it is not necessary that the

Document A – Client's write-up of his invention (3/10)

through-holes 7 are threaded however, since alternatively two nuts can be provided on the side of the hub opposite the heads 9 of the screws 8). In many applications the hub is more like the hub 13 shown in Fig. 3(a), having a generally cylindrical through-hole 14 of diameter d_7 (the rest of the hub 13 may be of any shape).

One way of using the invention in this case is to provide the a set of two elements: a first element 20 and a second element 21. The first and second elements 20, 21 are shown in Fig. 3(b). The first element 20 is made of deformable material. The first element 20 is identical to the element 5 of Fig. 2(b) (it has a generally cylindrical through-hole 23, and a frusto-conical outer surface 24), except that it contains two smooth through-holes 22, which will be aligned parallel to the axis 2 of the shaft 1.

The second element 21 is a generally cylindrical element having an outer diameter $d_8<d_7$. It has a frusto-conical cavity 25 of a similar shape to the hole 4 of Fig 2(a): that is, it has a circular cross-section at any point along the axis 2, and gradually becomes narrower to towards the right of Fig. 3(b). The second element 21 contains two threaded holes 26 which intersect with the cavity 25.

The usage of the elements 20, 21 is shown in cross-section in Fig. 3(c). The shaft 1 is passed through the hole 22 in the first element 20. The second element 21 is inserted into the hole 14 in the hub 13. The first element 20 is then inserted into the cavity 25 of the second element 21. Screws 8 are threaded through the holes 22, and tightened into the threaded holes 26. This drives the elements 20, 21 together, and the frusto-conical surface 24 slides against the frusto-conical surface of the cavity 25. The force to which each of the elements 20, 21 is subject is shown by the arrows of Fig. 3(d). As shown in Fig. 3(d) the left-most part of the second element 21 is deformed outwardly, until it bears against the inward facing surface of the hole 14, and makes strong frictional engagement with it; while the right-most part of the first element 20 is deformed inwardly to bear tightly against the shaft 1. Thus, the shaft 1 and hub 13 are firmly connected together.

PAPER A: PREPARATION OF A PATENT SPECIFICATION
2 October 2012, Tuesday
1330 – 1730 hrs

Maximum Time: 4 Hours (includes reading time) Maximum Marks: 100

Document A – Client's write-up of his invention (4/10)

We envisage selling a kit containing the first element 20 and the second element 21. The kit will be sold in a hardware store, to individuals who would use it with their own screws 8, to connect together a shaft 1 and hub 13 which they have obtained from other organizations.

Please draft a patent application for our invention.

PAPER A: PREPARATION OF A PATENT SPECIFICATION
2 October 2012, Tuesday
1330 – 1730 hrs

Maximum Time: 4 Hours (includes reading time) Maximum Marks: 100

Document A – Client's write-up of his invention (5/10)

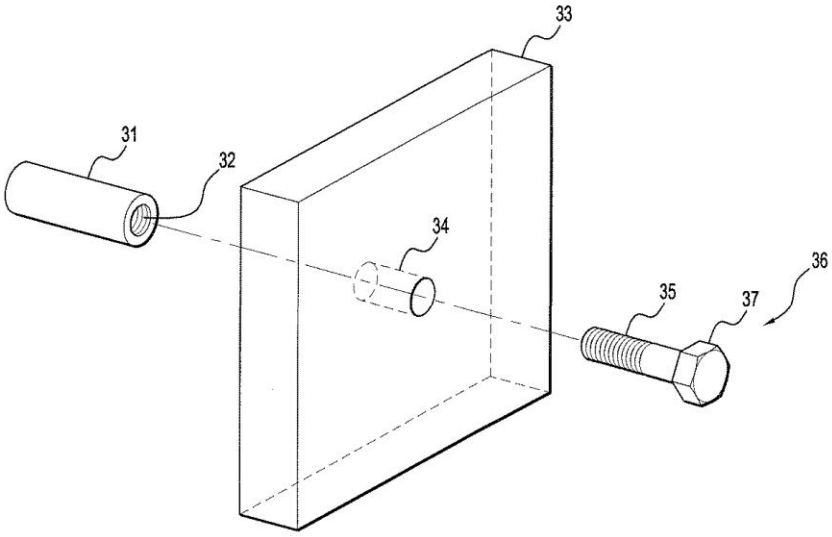

FIG. 1 (a)

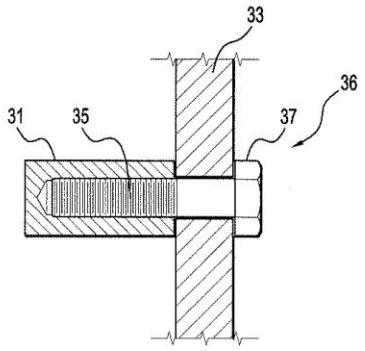

FIG. 1 (b)

PAPER A: PREPARATION OF A PATENT SPECIFICATION
2 October 2012, Tuesday
1330 – 1730 hrs

Maximum Time: 4 Hours (includes reading time) Maximum Marks: 100

Document A – Client's write-up of his invention (6/10)

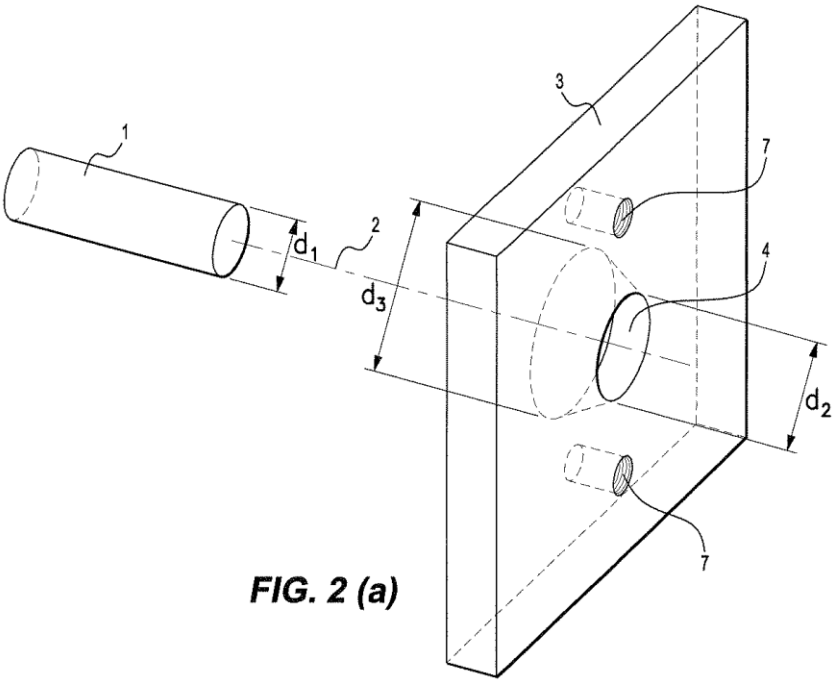

FIG. 2 (a)

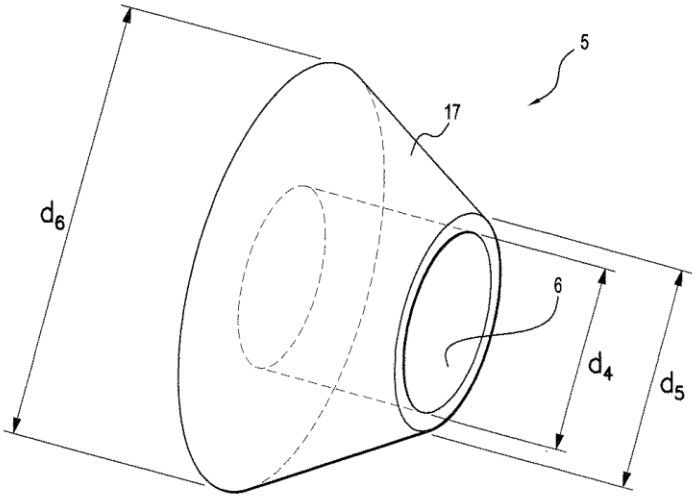

FIG. 2 (b)

PAPER A: PREPARATION OF A PATENT SPECIFICATION
2 October 2012, Tuesday
1330 – 1730 hrs

Maximum Time: 4 Hours (includes reading time) Maximum Marks: 100

Document A – Client's write-up of his invention (7/10)

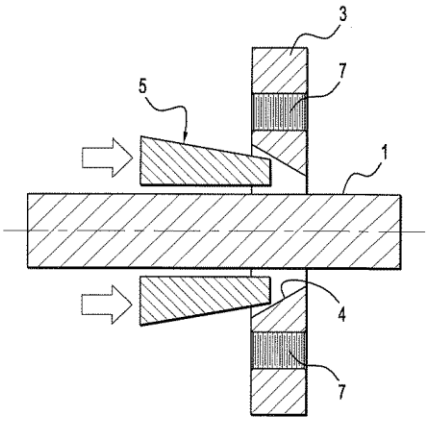

FIG. 2 (c)

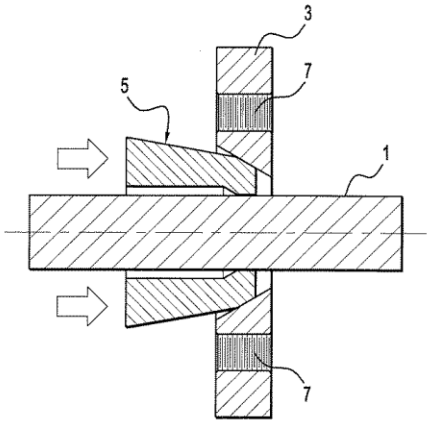

FIG. 2 (d)

PAPER A: PREPARATION OF A PATENT SPECIFICATION
2 October 2012, Tuesday
1330 – 1730 hrs

Maximum Time: 4 Hours (includes reading time) Maximum Marks: 100

Document A – Client's write-up of his invention (8/10)

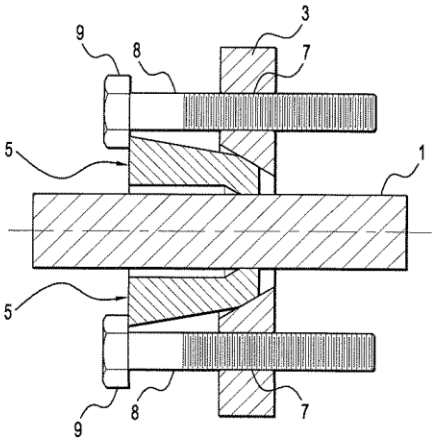

FIG. 2 (e)

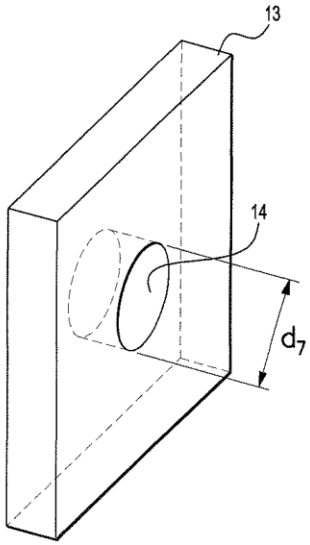

FIG. 3 (a)

PAPER A: PREPARATION OF A PATENT SPECIFICATION
2 October 2012, Tuesday
1330 – 1730 hrs

Maximum Time: 4 Hours (includes reading time) Maximum Marks: 100

Document A – Client's write-up of his invention (9/10)

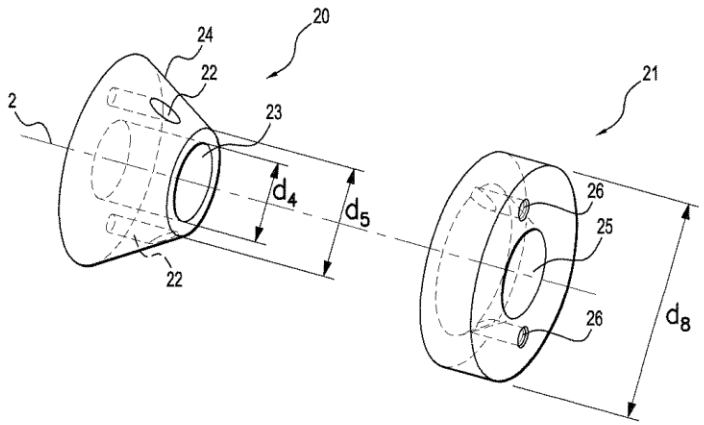

FIG. 3 (b)

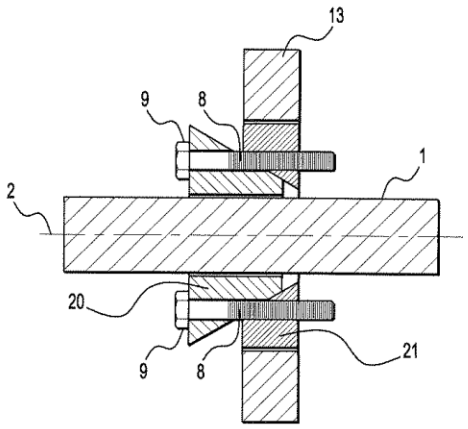

FIG. 3 (c)

PAPER A: PREPARATION OF A PATENT SPECIFICATION
2 October 2012, Tuesday
1330 – 1730 hrs

Maximum Time: 4 Hours (includes reading time) Maximum Marks: 100

Document A – Client's write-up of his invention (10/10)

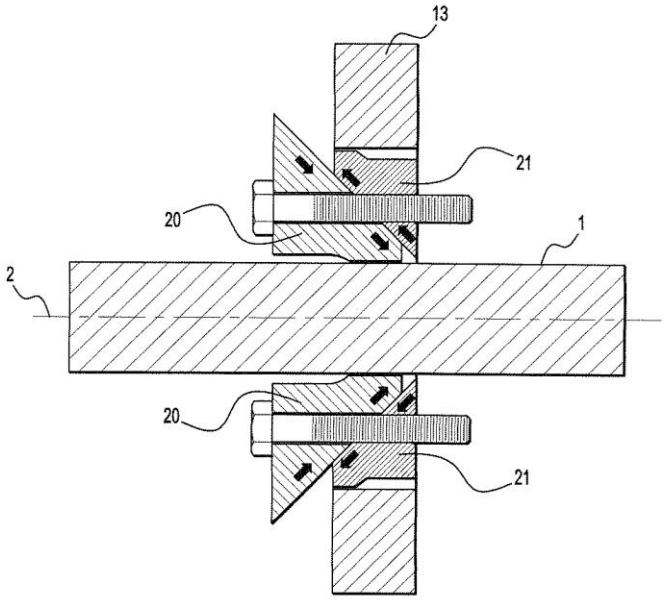

FIG. 3 (d)

End