INTELLECTUAL PROPERTY OFFICE OF SINGAPORE
PATENT AGENTS QUALIFYING EXAMINATION 2010

PAPER B: AMENDMENT OF A PATENT SPECIFICATION
5 October 2010, Tuesday
1330 – 1730 hrs

Maximum Time: 4 Hours (includes reading time) Maximum Marks: 100

INTELLECTUAL PROPERTY
OFFICE OF SINGAPORE

INSTRUCTIONS TO CANDIDATES

1. This Paper consists of 35 pages, including this cover page.

2. Write your answers in English. Answers in any other language will not be marked. Answers in illegible handwriting will not be taken into consideration.

3. Two copies of the question paper are provided, one is for your reading and the other is for your use (optional) when answering the question(s) in the Answer Booklet(s).

4. Only your answers and/or drawings to the question(s) written or glued in the Answer Booklet(s) provided by the Examination Secretariat will be considered. You are to write on one side of each sheet in the Answer Booklet (s).

5. Information provided in the question(s) may be obtained from actual situations or modified therefrom for the purpose of this examination. You should accept the facts given in the Paper. Assume also that the prior art given is exhaustive.

6. a) Your task is to prepare a draft response to the Written Opinion, including amendment to the claims if necessary. The basis for any amendment proposed to the claims must be indicated.
   b) For the purpose of this Paper you do not need to propose any amendments to the description of the Patent Application.

To be continued

7. Candidates may find more than one potential amendment that may render the claims valid by overcoming the objections in the Written Opinion. In the advice letter to client, candidates should identify the amendment (s) that give (s) the best protection to the client and give recommendations to client, including the option of using alternatives, if any.

8. The advice letter to client can be prepared in point form.

9. The documents provided in the question are:

   (a) Document A – Letter from Client (includes questions) (2 pages);

   (b) Document B – Singapore Patent Application (7 pages of description plus claims and 2 pages of drawings);

   (c) Document C – Written Opinion (2 pages);

   (d) Document D1 WO 03/01000 (5 pages of description plus claims and 2 pages of drawings); and

   (e) Document D2 US 7,000,200 (6 pages of description and 7 pages of drawings)

End

PAPER B: AMENDMENT OF A PATENT SPECIFICATION
5 October 2010, Tuesday
1330 – 1730 hrs

Maximum Time: 4 Hours (includes reading time) Maximum Marks: 100

Document A – Letter from Client (1/2)

Dear Patent Agent,

Thank you for your letter enclosing an official action from IPOS, and also the documents cited by the Examiner in rejecting my application.

I am not sure that the Examiner is correct. For a start, my design is much more compact than US 7,000,200 because the reservoir is inside the shower head. I also cannot understand why the Examiner is objecting to claim 5 – in my products, the reservoir is integrally formed and thus, I am not certain what the Examiner is unhappy about. As for WO 03/01000, the reservoir is in the handle and this is different from my product. Do you think there is a chance of overcoming the Examiner's objection? It is a pity if we fail to do so because our products are really selling well. I think this is because our products provide an efficient and automatic way of drawing out the liquid soap which prevents wastage of the liquid soap. One really important feature is that our shower heads are made of titanium which looks very elegant.

My R&D department has also recently told me that the flow selector for directing water, although simple and cheap to make, is not ideal. As a result, we may have to go back to the conventional valve to direct the water in the next batch of production, much like the one shown in the US document.

I note that the deadline is imminent and is not extendable. I hope I have provided you with sufficient information for you to file a response, so please proceed accordingly. By the way, I will be leaving tonight to cycle around the world and will not be contactable. Please send me a memo explaining what you have done to my office in Malaysia, which is my rest stop, so that I can have a quick look before continuing my journey again.

Yours sincerely,

Alex
Managing Director
Best Shower Experience Pte Ltd

PAPER B: AMENDMENT OF A PATENT SPECIFICATION
5 October 2010, Tuesday
1330 – 1730 hrs

Maximum Time: 4 Hours (includes reading time) Maximum Marks: 100

Document A – Letter from Client (2/2)

Question 1 – Prepare a draft response to the Written Opinion, including a proposed set of claims. Your draft response should include any claim amendments, correction of errors and new claims, if these are necessary in your view. Your draft response should also include an analysis of the prior art.

Question 2 – Prepare a letter to the client explaining what you have done. Your letter should discuss, among other things, your draft response and why you did or did not follow the client's suggestions.

PAPER B: AMENDMENT OF A PATENT SPECIFICATION
5 October 2010, Tuesday
1330 – 1730 hrs

Maximum Time: 4 Hours (includes reading time) Maximum Marks: 100

Document B – Singapore Patent Application (1/9)

[Filing Date: 1 June 2008, no priority date]

Shower head for selectively adding liquid soap to shower water

BACKGROUND OF THE INVENTION

The present invention relates to a shower head. More particularly, the present invention relates to a shower head for selectively adding liquid soap to shower water.

Conventional shower heads include a water outlet through which water flows when a user takes a shower. When a user needs to soap his or her body, the user either turns off a tap to stop the flow of water or lets the water continue to flow. This is time-consuming or results in water wastage. Further, quite often, due to space constraints, there is no proper shelve or ledge for placing the soap, shower gel etc. resulting in these items commonly placed on the floor of the shower and this results in inconvenience, especially for the elderly and infirm, since this requires bending over to pick up the soap or shower gel etc.

As a result, it is an object of this invention to provide a shower head which addresses the problems of the prior art, and/or to provide the public with a useful choice.

SUMMARY OF THE INVENTION

The invention is defined by the claims.

As it would be appreciated from the detailed description, the shower head proposed by this invention is simple to use and creates a neat package.

BRIEF DESCRIPTION OF THE DRAWINGS

The figures of the drawings are briefly described as follows:

FIG. 1 is a diagrammatic perspective view of the shower head of the present invention;

Document B – Singapore Patent Application (2/9)

FIG. 2 is a diagrammatic cross sectional view taken along LINE 2-2 in FIG. 1 of the shower head of the present invention in the shower water only mode; and

FIG. 3 is a diagrammatic cross sectional view taken along LINE 3-3 in FIG. 1 of the shower head of the present invention in the combined shower water and liquid soap mode.

DETAILED DESCRIPTION OF THE PREFERRED EMBODIMENT

Referring now to the figures, in which like numerals indicate like parts, and particularly to FIG. 1, which is a diagrammatic perspective view of the shower head of the present invention, the shower head of the present invention is shown generally at 10 for selectively adding liquid soap 12 to shower water 14. The liquid soap 12 can be various cleansers such as shampoo, conditioner and shower gel.

The configuration of the shower head 10 can best be seen in FIG. 2 and in FIG. 3, which are, respectively, a diagrammatic cross sectional view taken along LINE 2-2 in FIG. 1 of the shower head of the present invention in the shower water only mode, and a diagrammatic cross sectional view taken along LINE 3-3 in FIG. 1 of the shower head of the present invention in the combined shower water and liquid soap mode, and as such, will be discussed with reference thereto.

The shower head 10 comprises a nozzle 16, an integrally formed reservoir 18, a partition 20, and a flow selector 22. The partition 20 is contained in the nozzle 16 and defines a first chamber 24 and a second chamber 26 in the nozzle 16. The reservoir 18, contained in the nozzle 16, is for holding the liquid soap 12 therein, and fluidly communicates with the second chamber 26. The flow selector 22 is contained in the nozzle 16 and is for selectively directing the water 28 from a water source 30, via the water inlet 23 and into either the first chamber 24 where it exits the nozzle 16 as the shower water 14 (FIG. 2) or into the second chamber 26 where the water 28 is mixed with the liquid soap 12 and exits the nozzle 16 as the soapy shower water 32 (FIG. 3).

The nozzle 16 has a forwardmost wall 34, an uppermost wall 36, a rearwardmost wall 38, and

Document B – Singapore Patent Application (3/9)

an outlet 40. The outlet 40 has a multiplicity of water outlet ports which are divided into two sections and as can be appreciated from Figures 2 and 3, the shower water 14 and the soapy shower water 32 are discharged from the nozzle 16 from different sections.

The reservoir 18 is defined by a floor 42 which extends rearwardly and upwardly from the forwardmost wall 34 to the uppermost wall 36.

The reservoir 18 has an aperture (not shown) sealed by a plug 43. The plug 43 is disposed at the forwardmost wall 34, and when removed allows the reservoir 18 to be filled with the liquid soap 12. In the alternative, the plug 43 may include a one-way valve which allows the liquid soap 12 to be injected into the reservoir 18 but prevents the liquid soap 12 in the reservoir 18 from leaking out of the plug 43. In this way, the reservoir 18 may be refilled without removing the plug 43.

The floor 42 has discharge perforations 44. The perforations 44 allow the reservoir 18 to fluidly communicate with the second chamber 26 and allow the liquid soap 12 to leave the reservoir 18, enter the second chamber 26, mix with the water 28, and exit the nozzle 16 as the soapy shower water 32 when the water 28 is directed by the flow selector 22 into the second chamber 26. As the water 28 flows into the second chamber 26, this creates a negative pressure between the reservoir 18 and the second chamber 26 that causes the liquid soap 12 to be sucked or drawn out of the reservoir 18 via the perforations 44 and into the second chamber 26. The liquid soap 12 is then mixed with the water flow prior to exiting the nozzle. In this way, a more controlled flow of the liquid soap 12 is achieved.

The partition 20 extends upwardly from engagement with the outlet 40 to below the floor 42 so as to form a conduit 48 therebetween, and extends rearwardly therefrom still below the floor 42 to between the uppermost wall 36 and the rearwardmost wall 38 where it terminates in a terminal end which defines an entrance to the first and second chambers 24,26. The conduit 48 of the second chamber 26 defines a constriction between the partition 20 and the floor 42 and opens up to a larger space just above the outlet 40.

Document B – Singapore Patent Application (4/9)

The flow selector 22 comprises a door 52, which is pivotally attached by a pivot pin 54 to the terminal end of the partition 20.

The door 52 sweeps from a first position of engagement with the uppermost wall 36 where it closes the conduit 48 preventing the water 28 from entering the second chamber 26 and mixing with the liquid soap 12 while simultaneously opening communication of the water 28 with the first chamber 24 to allow only the shower water 14 to exit the outlet 40 (FIG. 2), to a second position of engagement with the rearwardmost wall 38 where it closes communication of the water 28 with the first chamber 24 while simultaneously opening the conduit 48 allowing the water 28 to enter the second chamber 26 and mix with the liquid soap 12 as explained earlier to allow only the soapy shower water 32 to exit the outlet 40 (FIG. 3).

The pivot pin 54 extends through the nozzle 16 to a terminal end 56 (FIG. 1).

The flow selector 22 further comprises a knob 58 (FIG. 1). The knob 58 engages, and rotates with, the terminal end 56 so as to selectively move the door 52 between its first and second positions. The knob 58 is operated by a user.

The shower head 10 further comprises a handle 60. The handle 60 extends from, and is in fluid communication with, the nozzle 16 and has an inlet 23 in fluid communication with the water source 30.

It will be understood that each of the elements described above, or two or more together, may also find a useful application in other types of constructions differing from the types described above.

While the invention has been illustrated and described as embodied in a shower head for selectively adding liquid soap to shower water, it is not limited to the details shown, since it will be understood that various omissions, modifications, substitutions and changes in the forms and details of the assembly illustrated and its operation can be made by those skilled in the art without departing in any way from the spirit of the present invention.

Document B – Singapore Patent Application (5/9)

Without further analysis, the foregoing will so fully reveal the gist of the present invention that others can, by applying current knowledge, readily adapt it for various applications without omitting features that, from the standpoint of prior art, fairly constitute characteristics of the generic or specific aspects of this invention.

PAPER B: AMENDMENT OF A PATENT SPECIFICATION
5 October 2010, Tuesday
1330 – 1730 hrs

Maximum Time: 4 Hours (includes reading time) Maximum Marks: 100

Document B – Singapore Patent Application (6/9)

Claims:

1. A shower head for selectively adding liquid soap to shower water, comprising
an inlet for channeling the water into the shower head;
an outlet for discharging the water from the shower head;
a reservoir for storing the liquid soap;
a first and a second chamber;
a flow selector for selectively directing the water from the inlet to the first chamber for mixing with the liquid soap prior to discharging the mixed water and liquid soap from the outlet, or to a second chamber in which only the water is discharged from the outlet.

2. A shower head according to claim 1, wherein the first and second chambers are arranged above the outlet.

3. A shower head according to claim 1 or 2, wherein the outlet includes a multiplicity of water outlet ports.

4. A shower head according to claim 3, wherein the multiplicity of water outlet ports is divided into a first and a second section, the first section being configured to discharge the mixed water and liquid soap from the first chamber, and the second section is configured to discharge the water from the second chamber.

5. A shower head according to any preceding claim, wherein the reservoir is integrally formed with the shower head.

6. A shower head according to any preceding claim, further comprising an aperture for refilling the reservoir with the liquid soap.

7. A shower head according to claim 6, further comprising a plug for sealing the aperture.

8. A shower head according to any preceding claim, wherein the liquid soap is selected from the group consisting of shampoo, conditioner and shower gel.

Document B – Singapore Patent Application (7/9)

9. A shower head according to any preceding claim, wherein the flow selector includes a pivotable door for directing the water to the first chamber or the second chamber.

10. A shower head according to claim 9, wherein the pivotable door is pivotably attached to a pivot pin, and the shower head further comprises a knob operable by a user for moving the pivotable door.

PAPER B: AMENDMENT OF A PATENT SPECIFICATION
5 October 2010, Tuesday
1330 – 1730 hrs

Maximum Time: 4 Hours (includes reading time) Maximum Marks: 100

Document B – Singapore Patent Application (8/9)

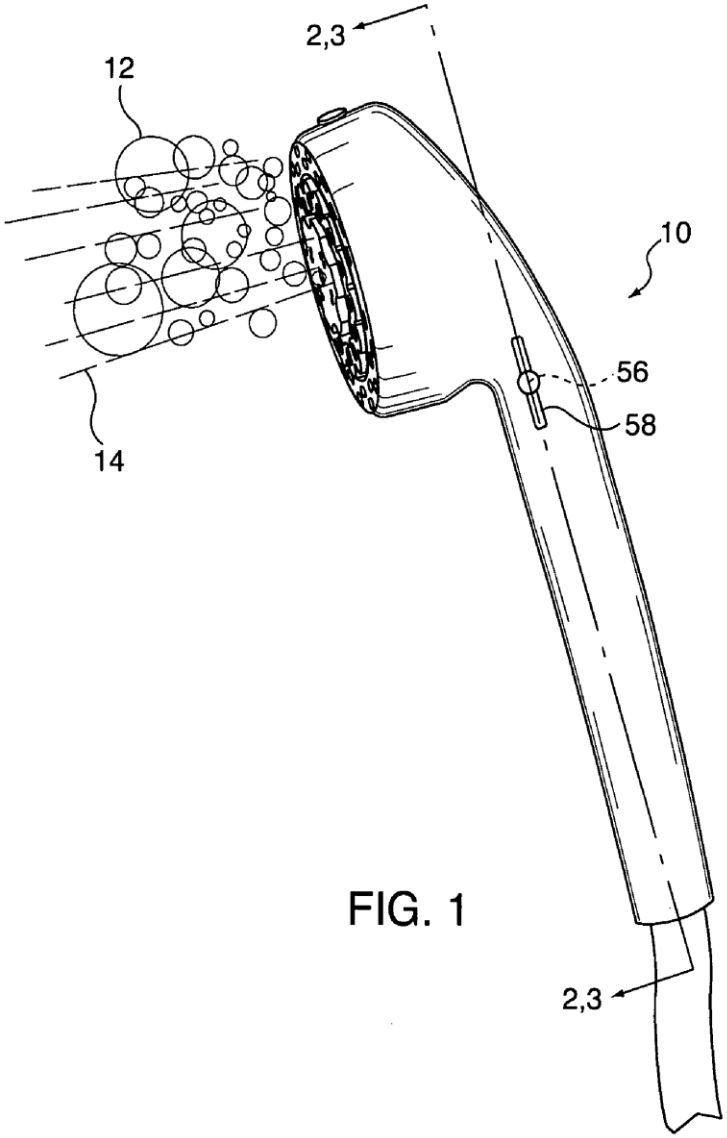

FIG. 1

PAPER B: AMENDMENT OF A PATENT SPECIFICATION
5 October 2010, Tuesday
1330 – 1730 hrs

Maximum Time: 4 Hours (includes reading time) Maximum Marks: 100

Document B – Singapore Patent Application (9/9)

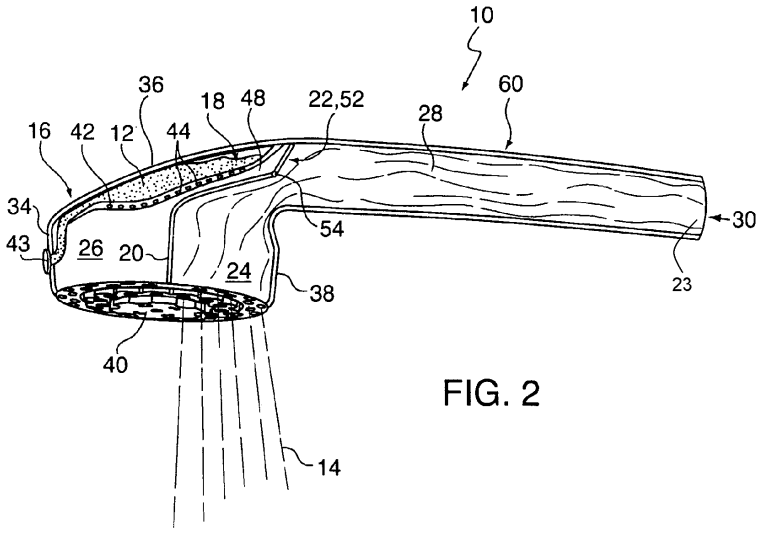

FIG. 2

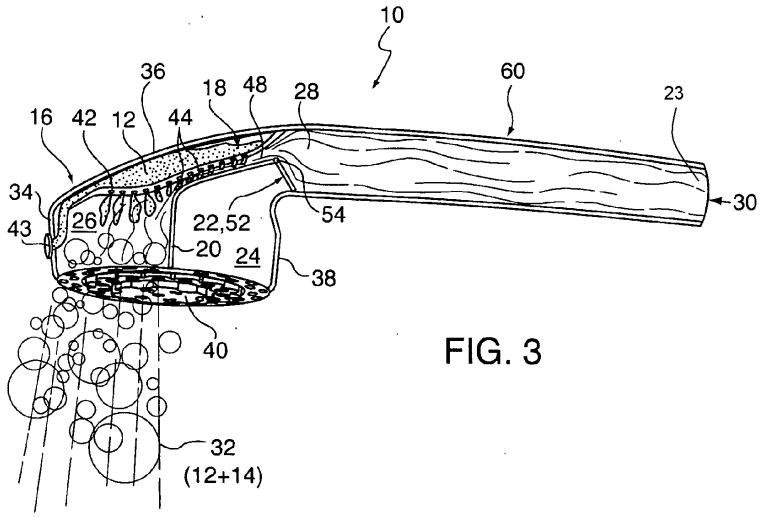

FIG. 3

PAPER B: AMENDMENT OF A PATENT SPECIFICATION
5 October 2010, Tuesday
1330 – 1730 hrs

Maximum Time: 4 Hours (includes reading time) Maximum Marks: 100

Document C – Written Opinion (1/2)

Statement:

Novelty:	YES	Claims 4, 7, 9, 10
	NO	Claims 1, 2, 3, 5, 6, 8
Inventive Step	YES	
	NO	Claims 4, 7, 9, 10
Industrial Applicability	YES	Claims 1-10
	NO	

Citations and Explanations

D1: WO 03/01000 published 08.08.2003
D2: US 7,000,200 published 13.12.2006

Novelty

Claim 1 is not new when compared with either D1 or D2. For example, D1 discloses a shower head comprising an inlet (10), an outlet (14), a reservoir (13), first and second chambers (the path from valve (12) to the reservoir (13) and to the valve (15) defines a first chamber; and the other path defines a second chamber) and a mechanism (12) for selectively directing water to the first chamber or second chamber.

Further, claims 2, 3, 5, 6 and 8 lack novelty in view of either D1 or D2.

Neither D1 nor D2 discloses the features of claims 4, 7, 9, 10.

Inventive Step

However, claims 4, 7, 9 and 10 lack an inventive step in view of D1 or D2. It is common general knowledge to use a pivotable door to open or close a channel instead of a valve as suggested in

Document C – Written Opinion (2/2)

D1 or D2, and to use a plug to seal off a hole. Further, it would be obvious to modify the spout of D2 to include a water outlet similar to the shower head (42).

Other observations

Claim 1 is not supported by the description, at least when claim 5 is read together with claim 1. The description does not teach an embodiment in which the reservoir is not integrally formed with the shower head.

Claim 1 is unclear at least with regard to the first and second chambers, which does not correspond with the description.

PAPER B: AMENDMENT OF A PATENT SPECIFICATION
5 October 2010, Tuesday
1330 – 1730 hrs

Maximum Time: 4 Hours (includes reading time) Maximum Marks: 100

Document D1 WO 03/01000 (1/7)

(D1: WO 03/01000 published 08.08.2003)

Detergent Dispensing Apparatus

The present invention relates to detergent dispensing apparatus. In particular, it relates to apparatus for dispensing a detergent into the flow of water to a shower.

When using a shower, one has to stand away from the shower to apply gel, shampoo or soap. This can be difficult due to lack of room especially in shower cubicles.

In order to overcome this problem, this invention fits to the shower unit connection of an existing shower. The shower hose then connects to the bottom of the device, feeding plain water, and then at a 90° turn of the knob it will feed the water over a soap, gel or shampoo stick allowing the soapy water to expel from the shower handset. Turning the knob back 90° provides the rinse water.

In its broadest aspect, the present invention provides a detergent dispensing apparatus for a shower system, the apparatus comprising:

i) an inlet and an outlet for operative connection in a water flow path to a shower head of the shower system;
ii) a first water flow path;
iii) a second water flow path;
iv) a detergent dispensing device in the second water flow path;
v) valve means variable between at least first and second positions,

wherein in the first position the first water flow path is open and the second flow path is closed; and in the second position the first water flow path is closed and the second water flow path is open.

Preferably, the apparatus further comprises a non-return valve between the inlet and the valve means.

Document D1 WO 03/01000 (2/7)

Preferably, the valve means is a three-way valve such that the valve is further variable to a third position in which the first and second water flow paths are both open.

Preferably, the second water flow path further comprises a non-return valve between the detergent dispensing device and the shower head.

The above and other aspects of the present invention will now be illustrated in further detail, by way of example only, with reference to the accompanying drawings in which:

Figure 1 is a schematic view of an embodiment of an apparatus according to the present invention in a plain water configuration; and

Figure 2 is a schematic view of the three-way valve of the embodiment of Figure 1 in a detergent dispensing configuration.

Figure 3 shows a shower head incorporating the apparatus of Figure 1;

Figure 4 shows an example of a liquid soap dispenser (enlarged view) for use in the shower head of Figure 3; and

Figure 5 is a front view of an inner barrel of the dispenser of Figure 4.

The present invention provides an apparatus that fits between an outlet of the shower unit and a shower head hose. The apparatus can consist of various magazines that hold gel, shampoo or soap sticks and valves that feed the contents of a magazine required to the shower head. A simple version with one magazine is shown in Figure 1.

Referring to the Figures there is provided an apparatus for dispensing a soap, gel or shampoo comprising a shower system connector 10 for engagement with a shower outlet (not shown) and in fluid communication with a non-return valve 11 and three-way valve 12 respectively. The non-

Document D1 WO 03/01000 (3/7)

return valve 11 prevents the back-flow of water to the shower system (not shown). Three-way valve 12 is rotatable to selectively divert the water flow exiting the shower outlet between a first water flow path and a second water flow path. The first flow path defines an unimpeded path for the flow of water exiting the shower outlet to the shower hose 14. The second flow path interposes the first flow path and further comprises a dispensing magazine 13 and a non-return valve 15, downstream of the magazine 13, to prevent back-flow thereto. The water flow through the system subsequently exits through the shower hose 14.

Figure 2 shows the three-way valve 12 in a configuration suitable for directing the water flow through the second flow path. In this configuration, all the water flowing through the shower outlet 10 is diverted to the second flow path.

The apparatus of the present invention allows a user to wet, wash and rinse in three easy steps without the need for using excessive cleaning products or turning the shower off. It is important that the water is directed through the dispensing magazine so that the water is mixed directly with the soap, gel or shampoo. This enables a more thorough mixture to be formed prior to the soapy water flowing to the shower hose 14. In this way, it avoids the need of any manual intervention to control the amount of soap, gel or shampoo to dispense.

It is envisaged that the apparatus may be configured to be contained within a shower head 20 shown in Figure 3. The shower head 20 includes a handle 22, a nozzle 24 of a conventional type with numerous outlets (not shown) for discharging water and a connector 25 similar to the connector 10 of Figure 1 which is connected to a water source. The shower head includes a slidable knob 26 for selecting the operation of a 3-way valve (not shown) which is disposed inside the shower head 20 near the connector 25. The 3-way valve is similar to the 3-way valve 12 of Figure 1 and is controlled by the knob 26 to select whether water from the water source is channeled to a liquid soap dispenser 28 or directly to the nozzle 24.

The location of the liquid soap dispenser 28 is shown in Figure 3 and an enlarged view of the dispenser is shown in Figures 4 and 5. It should be appreciated that face A of the dispenser 28 is configured to transverse the longitudinal axis of the handle 22. The dispenser 28 comprises an outer barrel 30 and an inner barrel 32 received in the outer barrel 30. The outer barrel 30 has

Document D1 WO 03/01000 (4/7)

an open grating 34 at the front and rear and the outer barrel 30 is configured to be inserted into a slot 50 of the handle 22 of the shower head 20 in a fixed position. The inner barrel 32 has an upper and lower chamber 36,38 for containing liquid soap with each chamber having an open channel 40,42 running from back to front. As it can be appreciated from Figure 5, the open channels 40,42 are offset so that the user can select which chamber 36,38 to use (for example, when the liquid soap in one chamber has finished).

Guides (not shown) are provided to aid the user to insert the inner barrel 32 into the outer barrel 30 to align one of the open channels 40,42 with the open grating 34. Catch 44 is also provided at the base of the inner barrel 32 to engage corresponding pairs of engagement members depending on which open channel is selected so that the inner barrel 32 sits securely within the outer barrel 30.

If the knob 26 is adjusted so that water is directed to the dispenser 28, the water flows through the open grating 34, into the corresponding channel of one of the chambers, mixes with the liquid soap therein and flows out of the channel and towards the nozzle 24 for discharging as soapy water. If rinse water is desired, the user slides the knob 26 to actuate the 3-way valve so that the water bypasses the dispenser 28 and flows to the nozzle 24.

A removable cover may be used to enclose the dispenser 28 so that appearance of the shower head looks aesthetically appealing.

PAPER B: AMENDMENT OF A PATENT SPECIFICATION
5 October 2010, Tuesday
1330 – 1730 hrs

Maximum Time: 4 Hours (includes reading time) Maximum Marks: 100

Document D1 WO 03/01000 (5/7)

CLAIMS :

1. A detergent dispensing apparatus for a shower system, the apparatus comprising:

   i) an inlet and an outlet for operative connection in a water flow path to a shower head of the shower system;

   ii) a first water flow path;

   iii) a second water flow path;

   iv) a detergent dispensing device in the second water flow path;

   v) valve means variable between at least first and second positions,

wherein the first position the first water flow path is open and the second flow path is closed; and in the second position the first water flow path is closed and the second water flow path is open and wherein the second water flow path further comprises a non-return valve between the detergent dispensing device and the shower head.

2. A detergent dispensing apparatus as claimed in Claim 1 wherein the apparatus further comprises a non-return valve between the inlet and the valve means.

3. A detergent dispensing apparatus as claimed in Claim 1 or Claim 2 wherein the valve means is a three-way valve such that the valve is further variable to a third position in which the first and second water flow paths are both open.

4. A detergent dispensing apparatus substantially as herein described and with reference to the accompanying drawings.

PAPER B: AMENDMENT OF A PATENT SPECIFICATION
5 October 2010, Tuesday
1330 – 1730 hrs

Maximum Time: 4 Hours (includes reading time) Maximum Marks: 100

Document D1 WO 03/01000 (6/7)

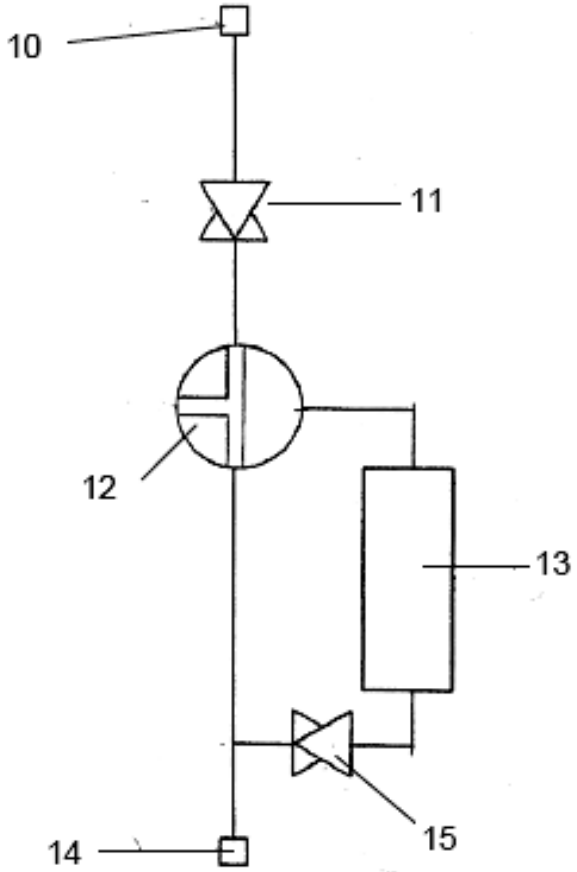

FIGURE 1

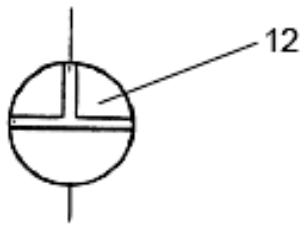

FIGURE 2

PAPER B: AMENDMENT OF A PATENT SPECIFICATION
5 October 2010, Tuesday
1330 – 1730 hrs

Maximum Time: 4 Hours (includes reading time) Maximum Marks: 100

Document D1 WO 03/01000 (7/7)

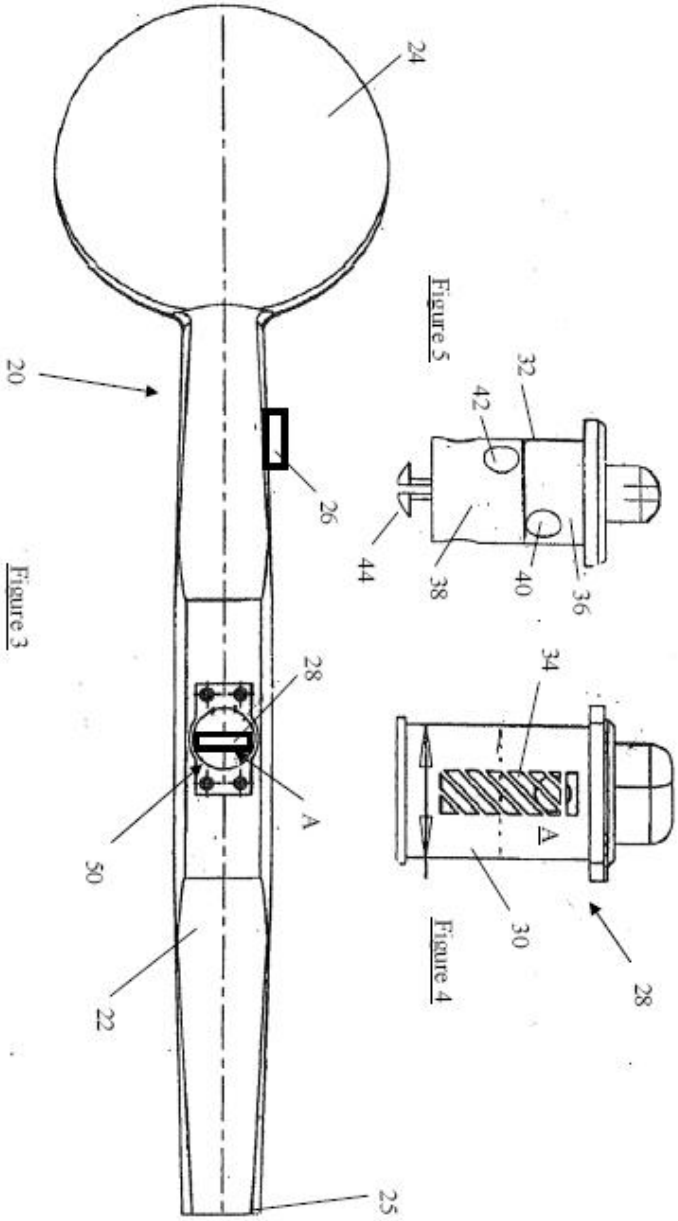

PAPER B: AMENDMENT OF A PATENT SPECIFICATION
5 October 2010, Tuesday
1330 – 1730 hrs

Maximum Time: 4 Hours (includes reading time) Maximum Marks: 100

Document D2 US 7,000,200 (1/13)

(D2: US 7,000,200 published 13.12.2006)

Device for Generating Foam In A Shower

BACKGROUND

Conventional shower heads are designed so that water flows out from the beginning to the end of the shower. Since the flow of water is not essential at all times during a shower, for instance when the user soaps his or her body, there is a waste of water and particularly of hot water.

Known in the art are apparatuses for shower in which the water is channeled into a dispenser holding the liquid soap so that as the water flows through the dispenser, it mixes with the liquid soap and the mixture flows out of the shower head as soapy water. A problem with such apparatuses is that this leads to excessive wastage of the water.

SUMMARY

The object of the present invention is to provide a device for generating foam for use with a shower head or the like, the device comprising:
a body;
a water circuit in the body, the water circuit having a water inlet for connection to a source of pressurized water, and a water outlet for receiving the shower head;
at least one container of foaming liquid;
foam generating means for generating foam inside the body using water and the foaming liquid;
deviation means connected to the water circuit for selectively deviating at least a fraction of the pressurized water towards the foam generating means;
manual control means for controlling of the deviation means from outside the body; and
spout means for evacuating the foam outside the body.

By providing the spout means and the shower head, it is possible to generate foam that may flow out of the device through an exit independent from the shower head, thereby allowing a

Document D2 US 7,000,200 (2/13)

substantial reduction of the water jet and a hot water economy.

The device according to the present invention is primarily designed for being connected between the pressurized water conduit and the shower head. It may also be adapted for other locations, such as a sink.

Advantageously, the device should allow a water economy up to 75% of the water that could have been used otherwise. This is thus a hot water economy, therefore of energy, that prevents natural resources from being wasted.

A non restrictive description of a preferred embodiment will now be given with reference to the appended drawings.

BRIEF DESCRIPTION OF THE DRAWINGS

FIG. 1 is a perspective view of a device according to a preferred embodiment of the present invention.

FIG. 2a is a longitudinal cross-sectional view of the device of FIG. 1, showing a mode of operation where foam is generated with one of the foaming liquids and where the water flow towards the shower head is interrupted.

FIG. 2b is a view similar to FIG. 2a, showing another mode of operation where the foam is generated with the other of the foaming liquids and where the flow of water towards the shower is interrupted.

FIG. 2c is a view similar to FIGS. 2a and 2b, showing another mode of operation where no foam is generated and where the flow of water towards the shower head is enabled.

FIG. 2d is a view similar to FIGS. 2a, 2b and 2c, showing another mode of operation where the generation of foam and the flow of water are completely interrupted.

Document D2 US 7,000,200 (3/13)

FIG. 3 is an exploded top perspective view of a selector of the device according to a preferred embodiment of the present invention, as connected to a rotative valve for controlling the deviation of pressurized water and a sliding member for controlling the flow of foaming liquid.

FIG. 4a is a partial cross-sectional view of the selector and the sliding member, shown at a position where the first and second foaming liquid openings are closed.

FIG. 4b is a view similar to FIG. 4a, showing the selector and the sliding member at another position where only the first foaming liquid opening is open.

FIG. 4c is a view similar to FIGS. 4a and 4b, showing the selector and the sliding member at another position where only the second foaming liquid opening is open, showing two positions thereof.

DESCRIPTION

Referring now to FIGS. 1 to 5, there is shown a preferred embodiment of the device according to the present invention.

FIG. 1 shows the device (40) when ready for use. The device (40) is connected to a conduit (41) acting as a source of pressurized water during the shower of the user. A shower head (42) is connected to the device (40). Of course, the expression "shower head" includes the variants such as a shower head connected at the end of a flexible pipe or any kind of water outlet adapted for use in a shower. Moreover, since the conduit (41) is not always under pressure, the expression "pressurized water" only means that the water is under pressure in the conduit (41) during the time the user takes a shower.

The device (40) comprises a water circuit inside the body of the device (40). The water circuit has a water inlet (7) for connection to the conduit (41). The water circuit further has a water outlet (8) on which the shower head (42) is connected.

In the present embodiment, two containers (1,1a) hold foaming liquids, such as liquid soap, oils,

Document D2 US 7,000,200 (4/13)

shampoo, etc. These foaming liquids are used by the foam generating means for generating foam inside the body, as explained hereinafter. A lid (2), provided with vent holes (3,3a), is used to close the top portion of the containers (1,1a). The vent holes (3,3a) helps the flow of the foaming liquid from the containers (1,1a) through the corresponding first foaming liquid opening (23) and second foaming liquid opening (24).

The water coming through the conduit (41) and then through the water circuit is selectively deviated by a water valve (33) and an adjacent water channel (9) for bringing the water to the foam generating means.

The water valve (33) has three basic positions: an "off" position where no water flows in the water circuit, a "foam generation" position where foam is generated, and a "rinse" position where all the water flows through the shower head (42). No foam is generated in the "rinse" position. The water valve (33) is set inside the water circuit and is progressively movable between the various positions. Proper sealing engagement is maintained between the water valve (33) and the entry of the channel (9) by means of a rubber seat (34).

As shown in FIG. 3, the water valve (33) has a side opening (30). Rubber gaskets (17,18) provide proper sealing engagement of the water valve (33) with the other parts. The bottom end of the water valve (33) is held by means of a small bore (31) that connects on a corresponding peg (not shown).

As shown in FIGS. 2a to 2d, the foam generating means comprises a chamber located under the containers (1,1a). One end of the chamber is connected to a spout (11) for evacuating the foam (27) outside. The spout (11) may be in the form of an elongated nozzle provided with a substantially downwardly-facing outlet.

To generate the foam, the foam generating means comprise a water spray (29) that creates a jet (28) with the pressurized water coming from the water channel (9). This water spray (29) is known in the art and thus, no further elaboration is needed. The jet (28) of water is substantially aimed at a settling basin (10) of the chamber. The foaming liquid from the containers (1,1a) flows by gravity but since its viscosity is usually important, the jet (28) helps to channel the

Document D2 US 7,000,200 (5/13)

foaming liquid to the settling basin (10) to mix with the water. Air is provided inside the chamber by an appropriate means, such as an air inlet (38) adjacent to the water diffuser (5) so that the air together with the water and foaming liquid generates foam. A protective screen (4) prevents foreign objects from entering into the chamber.

The device (40) is preferably controlled by a rotative manual selector (6) located on the side of the central part thereof. This selector (6) is preferably combined with the water valve (33) and a foaming liquid valve used for selectively opening and closing the channel providing the foaming liquids to the chamber. By providing such a combined selector (6), the foaming liquid valve is then synchronized with the water valve (33). Position indicators (36,37) allow the user to properly set the selector (6) to the desired mode.

Referring to FIG. 3, the foaming liquid valve comprises a sliding member (13) operatively connected to a circular groove (15) of variable depth in the selector (6). The sliding member (13) is movable in a corresponding housing (25) and is biased against the groove (15) by means of a spring (14). The sliding member (13) also has the function of selecting one of the containers (1,1a). As shown in FIG. 3, the sliding member (13) comprises transversal slots (23a,24a) to be aligned with openings (23,24) connected to a corresponding container (1,1A). This is illustrated more clearly in FIGS. 4a-4c. In this way, the user is able to adjust the selector (6) and control when to discharge the foaming liquid by gravity into the chamber and the amount to discharge depending on the alignment of the openings (23,24) and the transversal slots (23a,24a).

Referring back to FIGS. 2a to 2d, the settling basin (10) is provided with a bottom reduced opening (12) for draining any surplus of water or foaming liquid therein, such as when the shower is over. Water accumulates in the basin (10) up to the water level (35). The foam floats at the surface of the water and then flows out through the spout (11).

In use, the user adjusts the selector (6) to determine which mode is desired. The water economy is achieved when the user sets the selector (6) to only produce the foam (27), which is evacuated through the foam outlet. During that time, the flow of water through the shower head (42) is stopped and no water is wasted. The user then collects the foam (27) coming out of the spout (11) and uses it according to the needs, for instance on the body for soap and on the

Document D2 US 7,000,200 (6/13)

head for shampoo. The foam (27) flows out continuously by itself as foam is constantly generated in the chamber. If desired, the user may stop completely the flow of both water and foam using the selector (6).

It should be appreciated that the device (40) may be releasably attached to the shower head (42), for example screwed on, or it may be integrally formed with the shower head (42).

Although a preferred embodiment of the invention has been described in detail herein and illustrated in the accompanying drawings, it is to be understood that the invention is not limited to this precise embodiment and that various changes and modifications may be effected therein without departing from the scope or spirit of the invention.

PAPER B: AMENDMENT OF A PATENT SPECIFICATION
5 October 2010, Tuesday
1330 – 1730 hrs

Maximum Time: 4 Hours (includes reading time) Maximum Marks: 100

Document D2 US 7,000,200 (7/13)

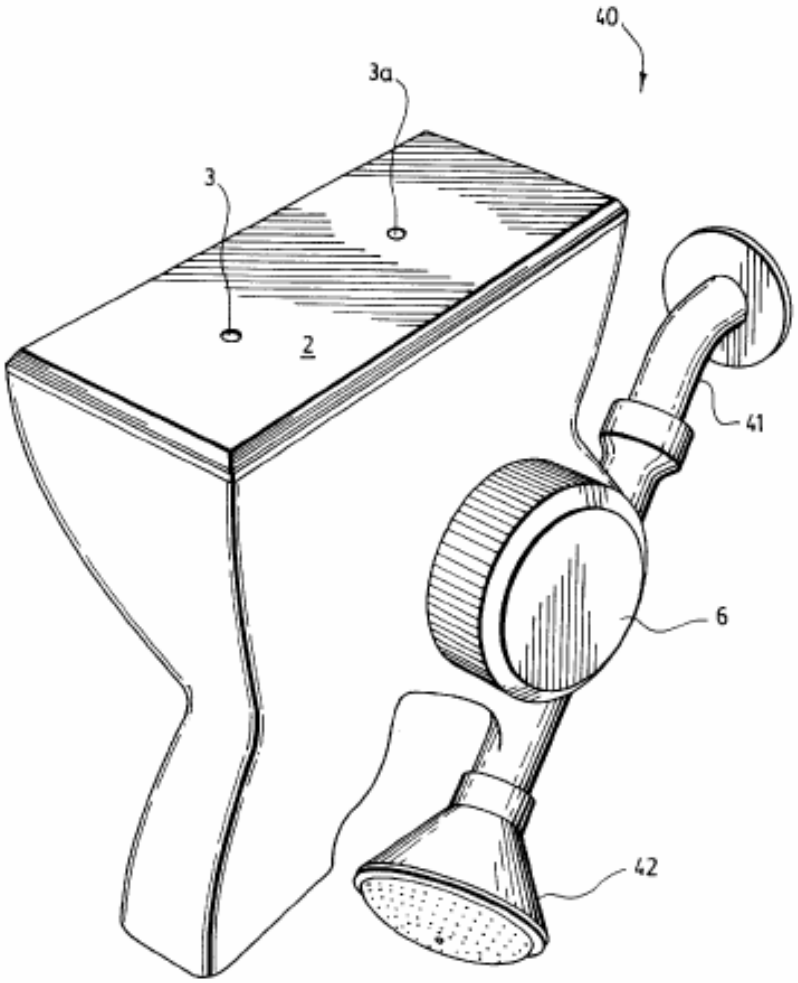

FIG. 1

PAPER B: AMENDMENT OF A PATENT SPECIFICATION
5 October 2010, Tuesday
1330 – 1730 hrs

Maximum Time: 4 Hours (includes reading time) Maximum Marks: 100

Document D2 US 7,000,200 (8/13)

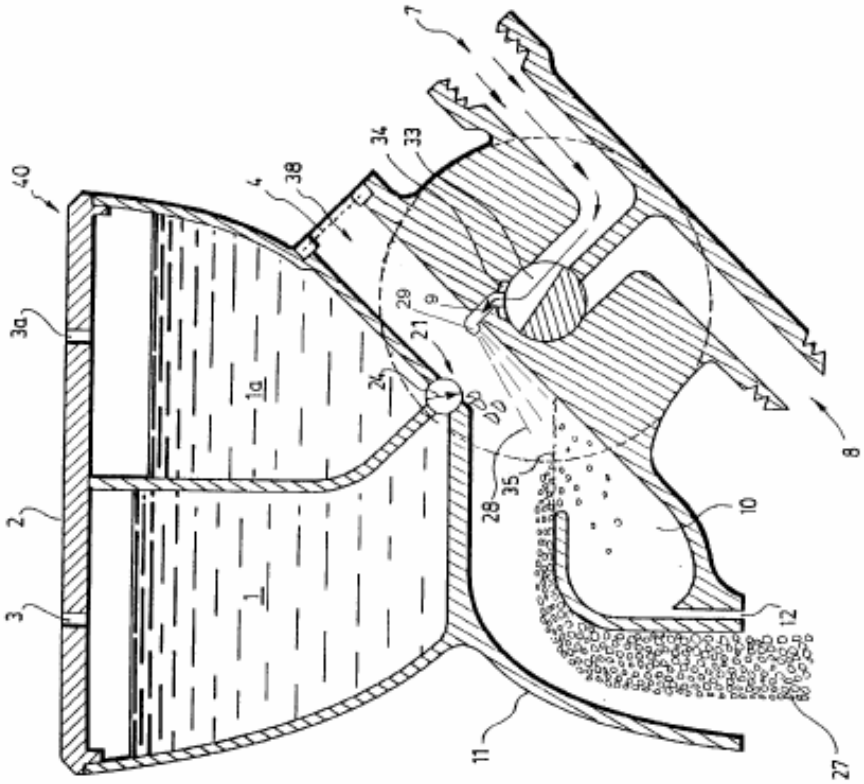

FIG. 2a

PAPER B: AMENDMENT OF A PATENT SPECIFICATION
5 October 2010, Tuesday
1330 – 1730 hrs

Maximum Time: 4 Hours (includes reading time) Maximum Marks: 100

Document D2 US 7,000,200 (9/13)

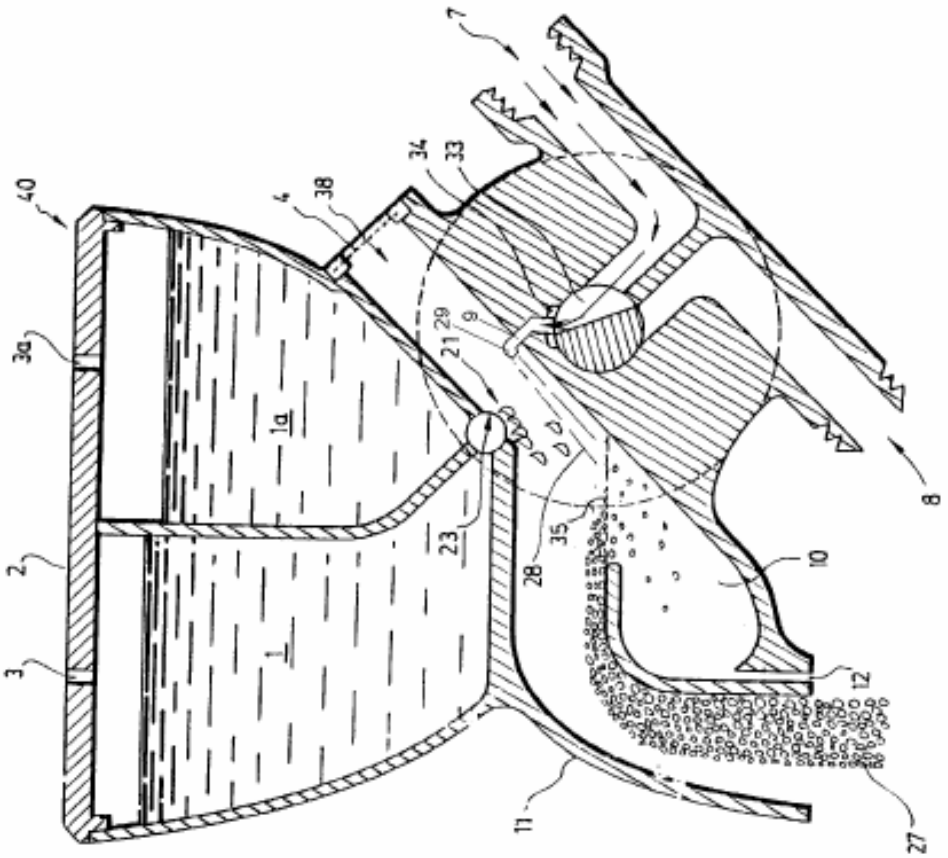

FIG. 2b

PAPER B: AMENDMENT OF A PATENT SPECIFICATION
5 October 2010, Tuesday
1330 – 1730 hrs

Maximum Time: 4 Hours (includes reading time) Maximum Marks: 100

Document D2 US 7,000,200 (10/13)

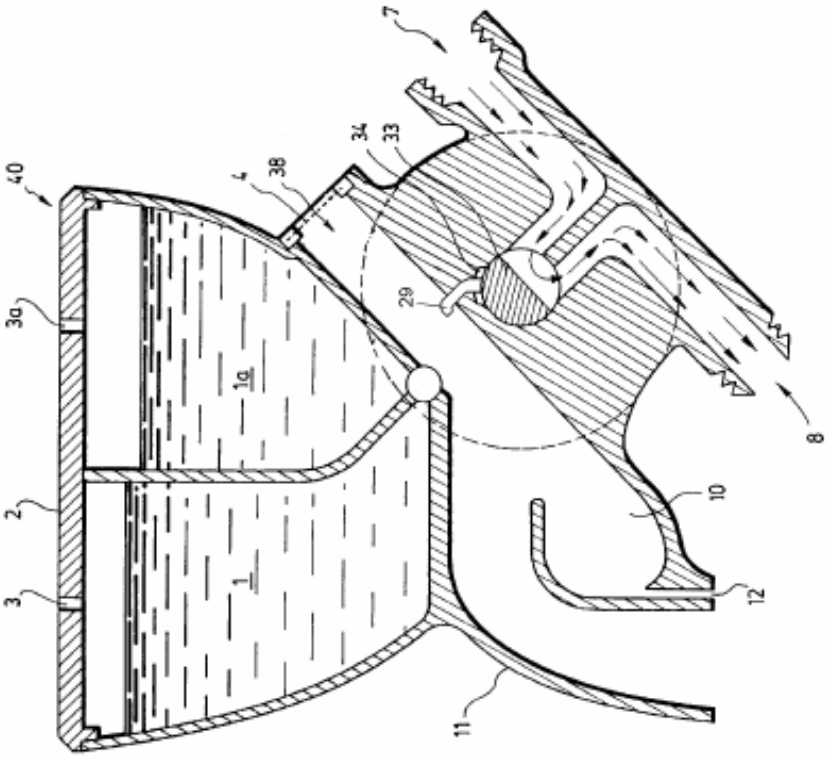

FIG. 2c

PAPER B: AMENDMENT OF A PATENT SPECIFICATION
5 October 2010, Tuesday
1330 – 1730 hrs

Maximum Time: 4 Hours (includes reading time) Maximum Marks: 100

Document D2 US 7,000,200 (11/13)

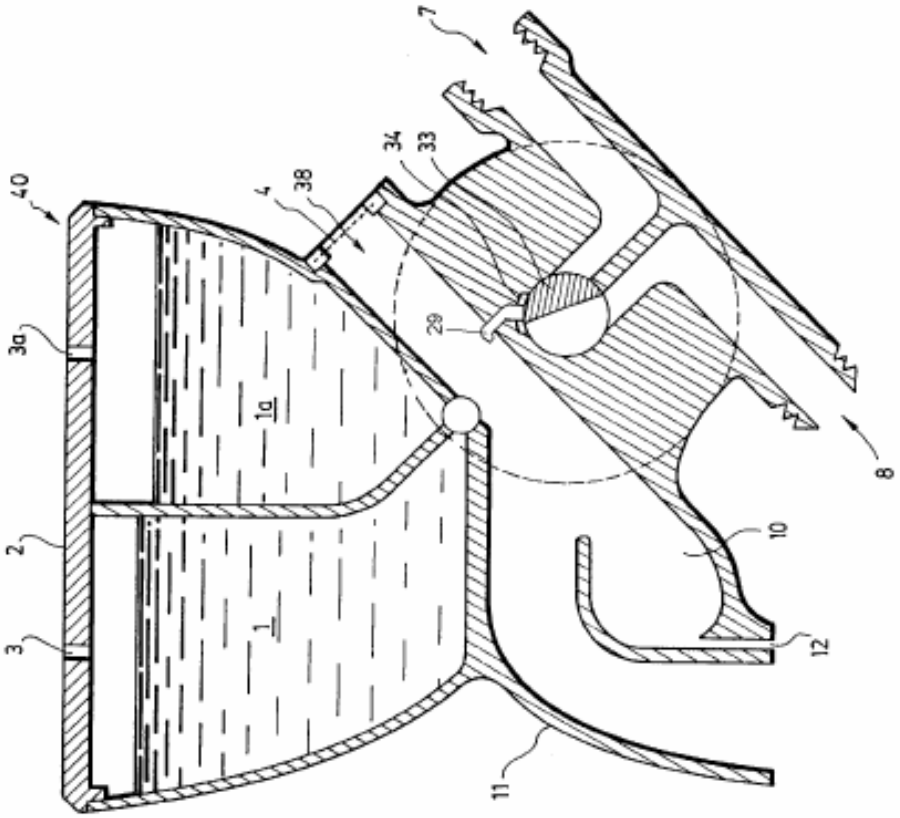

FIG. 2d

PAPER B: AMENDMENT OF A PATENT SPECIFICATION
5 October 2010, Tuesday
1330 – 1730 hrs

Maximum Time: 4 Hours (includes reading time) Maximum Marks: 100

Document D2 US 7,000,200 (12/13)

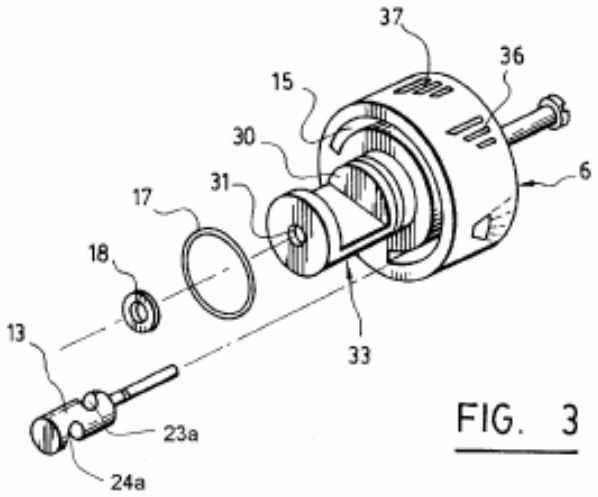

FIG. 3

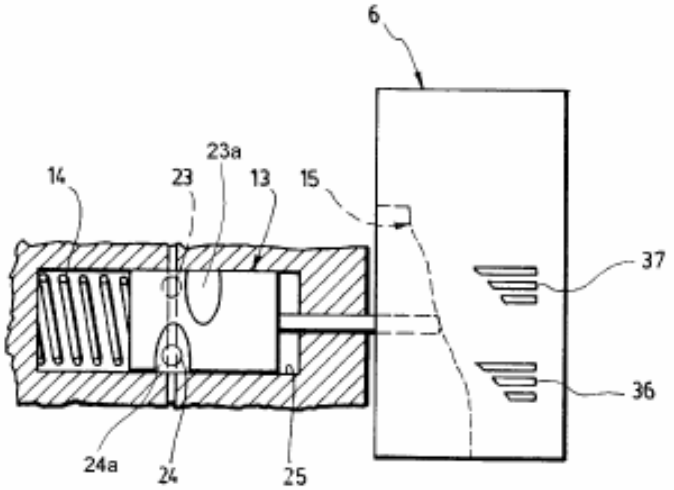

FIG. 4c

INTELLECTUAL PROPERTY OFFICE OF SINGAPORE
PATENT AGENTS QUALIFYING EXAMINATION 2010

PAPER B: AMENDMENT OF A PATENT SPECIFICATION
5 October 2010, Tuesday
1330 – 1730 hrs

Maximum Time: 4 Hours (includes reading time) Maximum Marks: 100

Document D2 US 7,000,200 (13/13)

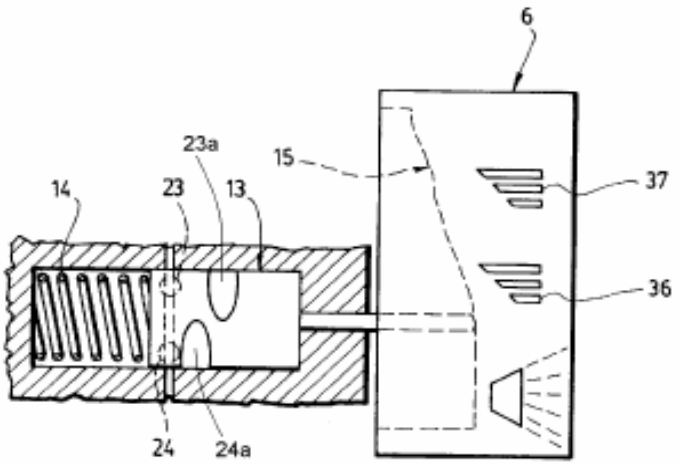

FIG. 4a

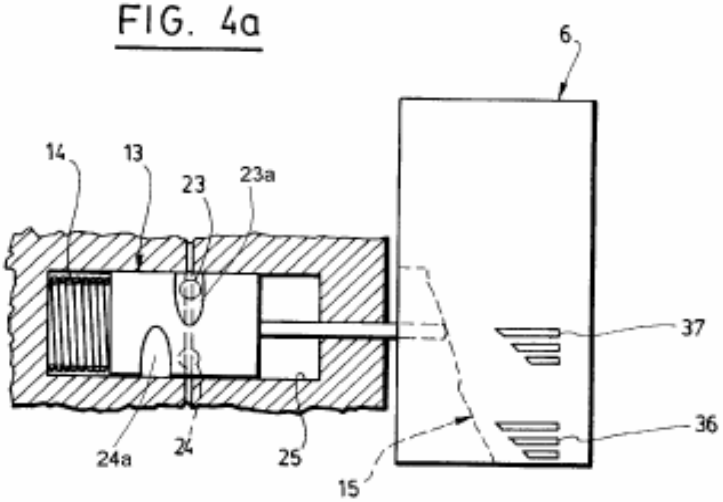

FIG. 4b

End