INTELLECTUAL PROPERTY OFFICE OF SINGAPORE
PATENT AGENTS QUALIFYING EXAMINATION 2010

PAPER A: PREPARATION OF A PATENT SPECIFICATION
4 October 2010, Monday
1330 – 1730 hrs

Maximum Time: 4 Hours (includes reading time) Maximum Marks: 100

INTELLECTUAL PROPERTY
OFFICE OF SINGAPORE

INSTRUCTIONS TO CANDIDATES

1. This Paper consists of 14 pages, including this cover page.

2. Write your answers in English. Answers in any other language will not be marked. Answers in illegible handwriting will not be taken into consideration.

3. Two copies of the question paper are provided, one is for your reading and the other is for your use (optional) when answering the question(s) in the Answer Booklet(s).

4. Only your answers and/or drawings to the question(s) written or glued in the Answer Booklet(s) provided by the Examination Secretariat will be considered. You are to write on one side of each sheet in the Answer Booklet(s).

5. Information provided in the question(s) may be obtained from actual situations or modified therefrom for the purpose of this examination. You should accept the facts given in the paper. Assume also that the prior art given is exhaustive.

6. The document provided in this question is:

   Document A – Client's write-up of his invention (5 pages of description including question and 2 pages of drawings; Annex 1 and Annex 2).

End

5

PAPER A: PREPARATION OF A PATENT SPECIFICATION
4 October 2010, Monday
1330 – 1730 hrs

Maximum Time: 4 Hours (includes reading time) Maximum Marks: 100

Document A – Client's write-up of his invention (1/13)

SingHub Mobile Radio Pte.Ltd.
Ang Mo Kio Ave. 10
Block 123, #12-723
Singapore 54345

Singapore, 01 October 2010

Messrs
Tan, Tan, Tan & Tan
Attn. Mr. Nelson Tan
1 Raffles Quay, 20-01
Singapore 112233

Dear Mr. Tan,

As you may know, we are specializing in the field of mobile radio communication applications.

Figure 1 shows our present system that is widely known in the commercial area, using a wire antenna 39. The wire antenna 39 has an antenna wire section 40 that is connected with the antenna plug of a radio and an electrically insulating and mechanical support section 41 in the form of a nylon line that is provided between a high object 45 - such as a coconut palm - and the antenna wire section 40. The free end of the nylon line should be fixed somewhere, best would be at the ground level.

Figure 1 also shows the wire antenna 39. We define that the wire has at one end an electrical connecting section 42 for connecting the antenna wire section 40 with an antenna plug of a radio 43 and at the opposite end an electrical insulation and support section 44 for connecting the antenna wire section 40 to the support rope 41. A short section of the support rope 41 electrically insulates the antenna wire section from the high object 45 if all parts are correctly installed. The antenna would otherwise not work.

The high object 45 should be at least 3 meters high so that one would have difficulties in installing the wire antenna 39 without any aid.

PAPER A: PREPARATION OF A PATENT SPECIFICATION
4 October 2010, Monday
1330 – 1730 hrs

Maximum Time: 4 Hours (includes reading time) Maximum Marks: 100

Document A – Client's write-up of his invention (2/13)

For installing the wire antenna 39, please refer to published Annex 1 which mentions known methods to do so. The most important disadvantage of some of the methods shown there is that they use weapons such as sling shots or bow and arrow for carrying the support rope over the tree. Such weapons are illegal in many countries. Casting a fishing sinker using a fishing rod is a difficult task even for trained fishermen because the release of the weight is controlled with the pressure of the finger. Further disadvantages are described in Annex 1.

Our new and innovative technical director Mr. Leong has been seeking to improve installing such wire antennas.

Mr. Leong has therefore developed a new wire installation device which is shown in Figure 2. Figure 2 shows an antenna installation whip 1 which consists of a ball throwing rod 2 with a spinning reel 3 attached thereto. The spinning reel 3 has a nylon line 4 which is equipped with a rubber ball 5 at its end.

Mr. Leong has told us that he has a dog and he often plays with it. He told us that his idea goes back to a dog toy "Mini Ball Collector" which is described in Annex 2. Although I have seen the Mini Ball Collector before, I have never thought of using it for mounting a wire antenna or even a tree support line.

The ball throwing rod 2 of our new antenna installation whip includes a ball receptacle 6 at its top end, a shaft 8 in its middle part and a handle 9 at the bottom end part. The shaft 8, the handle 9 and the receptacle 6 are manufactured from plastic in a die casting procedure. The size of the receptacle 6 is adapted to match with the outer shape of the ball 5 to initially retain the soft rubber ball 5 and to release it by a predetermined amount of propulsive force that deforms the ball and/or the receptacle 6. The ball receptacle 6 has two laterally retaining fingers 24 and an upper and lower retaining frame 25 for securely fastening the rubber ball 5. The two laterally retaining fingers 24 and the upper and lower retaining frames 25 of the scoop 6, are slightly flexible so a throwing weight such as the rubber ball 5 can be clipped firmly in place and also escape under a sufficiently high amount of propulsive force.

PAPER A: PREPARATION OF A PATENT SPECIFICATION
4 October 2010, Monday
1330 – 1730 hrs

Maximum Time: 4 Hours (includes reading time) Maximum Marks: 100

Document A – Client's write-up of his invention (3/13)

The shaft 8 is the thinnest part of the ball throwing rod 2. It tapers from a thick part, starting at the handle 9, to a thin part at the receptacle 6. The handle 9 has a plurality of recessed grips 10 that are designed to match the fingers of a user.

An eyelet 7 is attached to the upper part of the shaft 8 to guide the nylon line 4 between the rubber ball 5 and the spinning reel 3. The guide lug 7 is Teflon-coated to provide a better gliding action of the nylon line 4 through the eyelet 7.

One end of the nylon line 4 is attached to a snap hook 21, which is connected to a ball connection line 22. The rubber ball 5 has a through hole 23 which extends through its center. The ball connection line 22 is fed through this through hole 23. The ball connection line 22 may be released from the rubber ball 5.

The antenna mounting sling 1 as provided here is made from fishing tackle off-the-shelf parts which are easy to source and maintain. The rubber ball as provided here causes no damage if it hits an object or a person during the installation process of an antenna wire. No part of the antenna mounting sling 1 is forbidden as a weapon under any law of the world.

The spinning reel 3 and the guide lug 7 of the antenna installation device 1 can be used for installing a wire antenna over a high object, by propelling the rubber ball 5 over the high object. Therefore, a rubber ball 5 is connected with the nylon line 4 by using the snap hook 21. Then the rubber ball 5 is pressed into the scoop 6 – thereby bending the retaining fingers 24 until the rubber ball 5 is firmly held - and the nylon line 4 is tightened by turning a handle shaft 11 in the appropriate direction.

Then a first person will prepare to throw with the antenna installation whip 1, while holding it with one or two hands at the handle 9 and while securing the nylon line 4 with one finger to the shaft 8. The open side of the scoop 6 should point in the direction in which the rubber ball 5 is to be thrown.

Document A – Client's write-up of his invention (4/13)

The rubber ball 5 is a soft and therefore safe weight, which brings the line 4 over a high, predetermined object such as the high object 45. The first person will aim over the high object 45 over which the wire antenna should be placed and then move the antenna mounting sling 1 fast in the same direction.

At a predetermined position during this movement, the ball throwing device 1 has to be stopped suddenly. With some practice one will know the moment in which the shaft 8 is orthogonal to the throwing direction which leads towards a desired result. The inertia of the rubber ball 5 causes it to leave the scoop 6 against the retaining force of the retaining fingers 24. In other words, the rubber ball 5 is held by the ball throwing device 1 until – by a movement of the ball throwing device 1 – the inertia of the rubber ball 5 overcomes the retaining force of the ball throwing device 1. From this moment on, the flying rubber ball 5 carries the nylon line 4 over the high object 45. The nylon line 4 keeps unreeling from a spool 12 of the spinning reel 3 while the rubber ball 5 is traveling over the high object 45.

After the rubber ball 5 has carried the nylon line 4 over the high object 45, a second person would normally disconnect the rubber ball 5 from the nylon line 4 before connecting the antenna wire section 40 with the nylon line 4. This is done by hooking the support section 44 of the antenna wire section 40 into the snap hook 21, e.g. by forming a wire loop at the end of the antenna wire section 40 or otherwise such as by providing a dedicated clip at the end of the antenna wire section 40.

The first person will pull back the antenna wire section 40 towards the tip of the high object 45 by rotating the handle shaft 11 of the spinning reel 3, thereby pulling the nylon line 4 with the antenna wire section 40 back. In the meantime, the second person aids the smooth movement up of the antenna wire section 40 which is hooked up to the end of the nylon line 4. After the antenna wire section 40 has reached its end position, the first person cuts the nylon line 4 without disconnecting its end from the antenna wire section 40 such that a section of the nylon line 4 remains as an electrical insulator support rope 41 between the high object 45 and the antenna wire section 40. The free end of the support rope 41 should be fixed somewhere at the ground level.

PAPER A: PREPARATION OF A PATENT SPECIFICATION
4 October 2010, Monday
1330 – 1730 hrs

Maximum Time: 4 Hours (includes reading time) Maximum Marks: 100

Document A – Client's write-up of his invention (5/13)

While the "Mini Ball Collector" of Annex 2 is intended for use with small hollow balls that are similar to tennis balls, the new antenna installation device is working best with a full core rubber ball 5. We have tried it out and it works also fine with tennis balls that are filled with sand, coins, etc. as a weight. Both balls types – full core and hollow core - have a soft surface which prevents damages to glass windows and to persons if they are hit during a careless operation of the antenna installation whip 1. We further found out that the ball should exceed a minimum weight of about 2-3 ounces for reliably carrying a fishing line through branches and leaves of a tree. The rubber ball 5 and the nylon line 4 are economically important replacement parts for us because they often get lost or are used up. There is a high margin on this rubber ball 5 and on the nylon line 4 both at the initial sale of the throwing device set and later for the replacement parts. We have seen soft and ball-shaped round throwing weights with a through hole and with a line which is fed through the hole, especially in the area of commercial fishing gear, but we do not have a written prior art document for that.

Kindly send us a draft of a patent application which provides protection for the antenna mounting device and for a method of using it. If it makes sense, please claim also the ball with the through hole.

Please note that <u>we do not want more than 10 claims</u> because we do not want to pay excessive claim fees in later patent applications abroad. For each dependent claim, please state a reasonable advantage in the claim support section of the specification.

Best regards

XIN Dim Sum (Mme)
(Director)

PAPER A: PREPARATION OF A PATENT SPECIFICATION
4 October 2010, Monday
1330 – 1730 hrs

Maximum Time: 4 Hours (includes reading time) Maximum Marks: 100

Document A – Client's write-up of his invention (6/13)

Figure 1: the known wire antenna with a radio

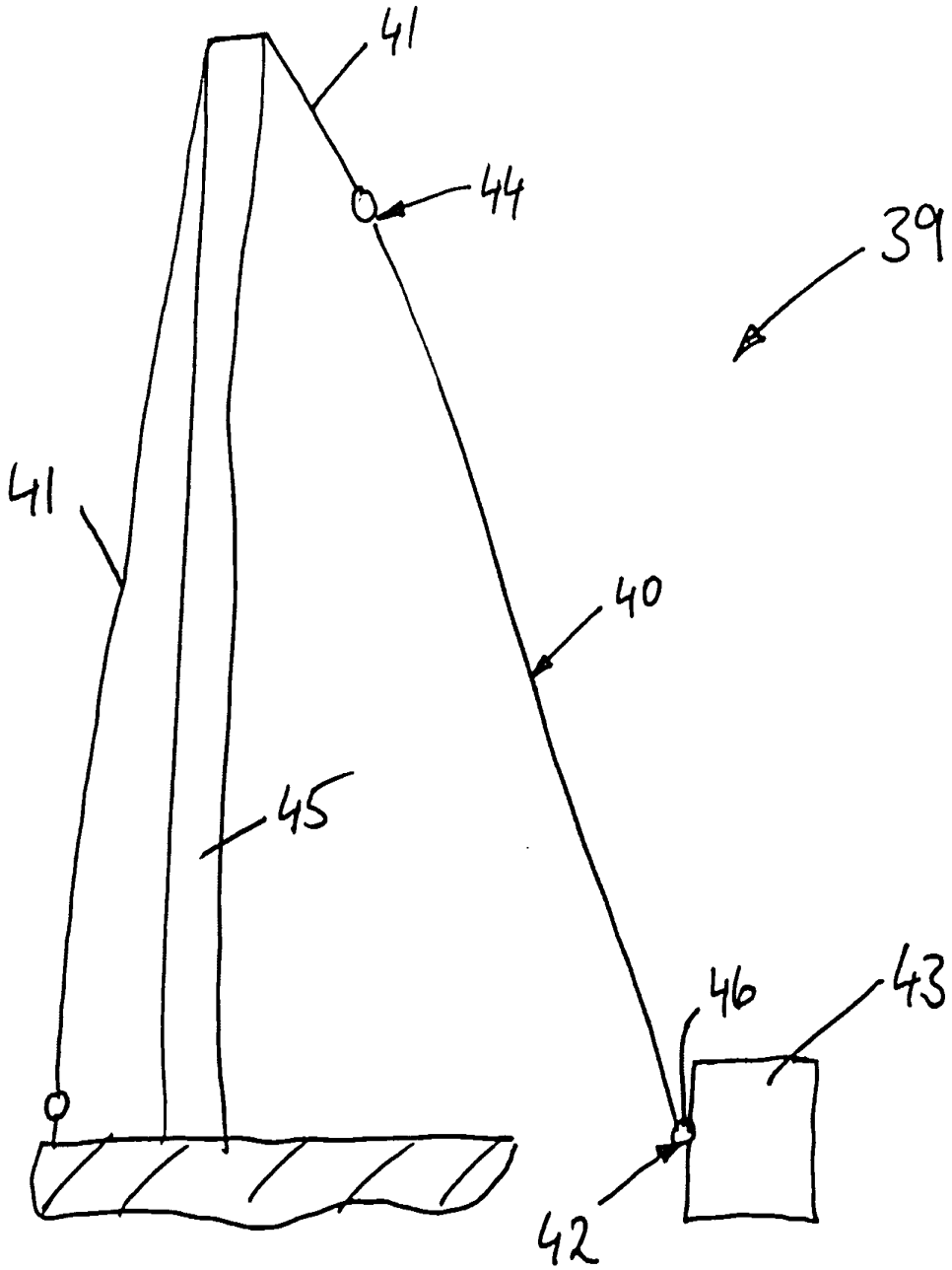

PAPER A: PREPARATION OF A PATENT SPECIFICATION
4 October 2010, Monday
1330 – 1730 hrs

Maximum Time: 4 Hours (includes reading time) Maximum Marks: 100

Document A – Client's write-up of his invention (7/13)

Figure 2: the new wire antenna installation device

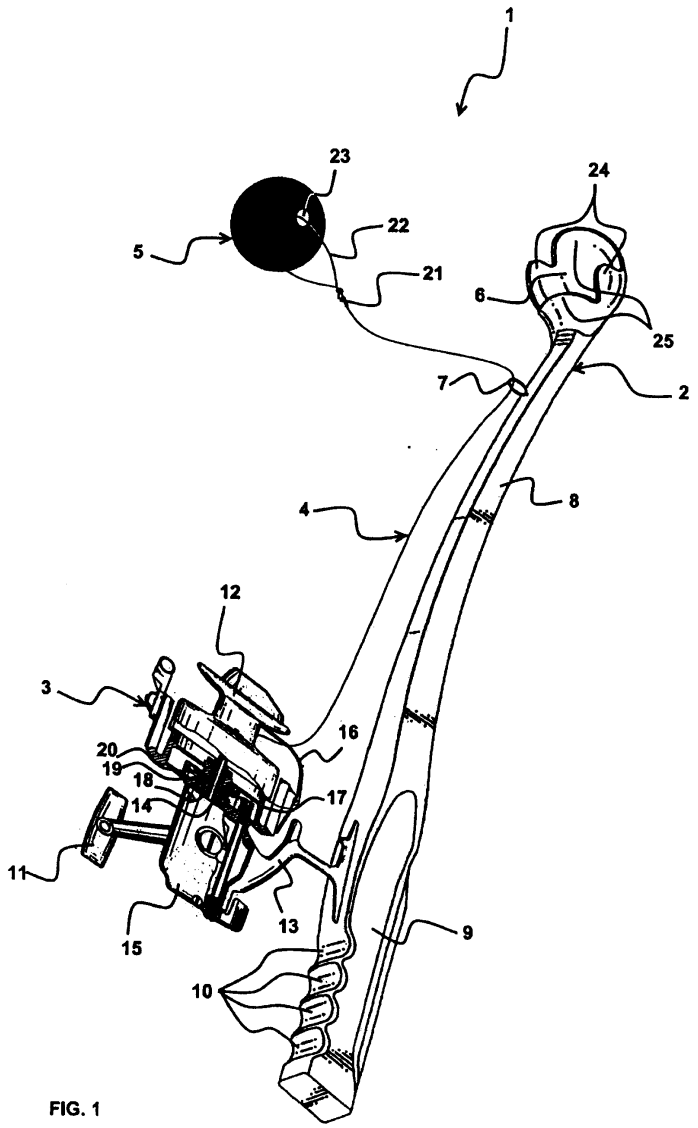

FIG. 1

PAPER A: PREPARATION OF A PATENT SPECIFICATION
4 October 2010, Monday
1330 – 1730 hrs

Maximum Time: 4 Hours (includes reading time) Maximum Marks: 100

Document A – Client's write-up of his invention (8/13)

Annex 1:

The following article was downloaded from http://www.hamradio.com on 01. September 2010

Installing Wire Antennas

Radio amateurs need a radio and - as each radio needs an antenna - they often chose a wire antenna which is supported by support lines which are in turn supported by a tree. The wire antenna is arranged with one end hooked up to the antenna socket of the radio and with the other end connected with the support line which in turn electrically insulates the wire antenna from the tree. After throwing the support line over a branch of the tree, the wire antenna can be pulled up with the support line. Please note that you should adjust the length of the wire antenna if you wish to use it for transmission. Choosing a wrong length may destroy the radio during transmission due to transmission energy being reflected back into the transmitter part of the radio.

Before selecting a support line for an antenna, you must first find a place to put it. Visually survey your property and find out exactly where you like to put up the support lines.

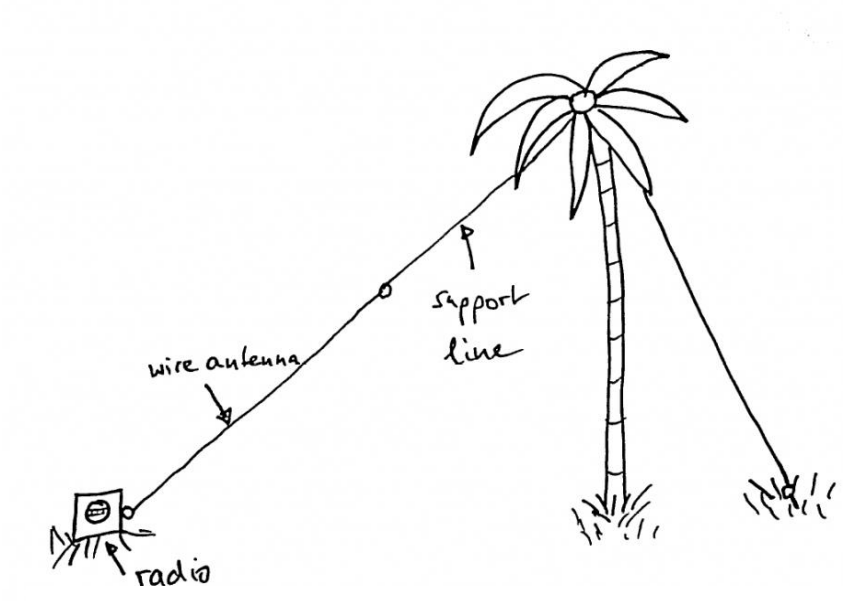

PAPER A: PREPARATION OF A PATENT SPECIFICATION
4 October 2010, Monday
1330 – 1730 hrs

Maximum Time: 4 Hours (includes reading time) Maximum Marks: 100

Document A – Client's write-up of his invention (9/13)

Support lines require special treatment and installation procedures.

Let's look at some ways to get your **support ropes** to the top of a tree.

Methods for getting the support rope up a tree

1. If you are a good fly fisherman, you can lob a fishing sinker over any limb of choice using a **fishing rod** with a **spinning reel**.
2. A **powerful slingshot** will put a fishing sinker and light weight monofilament fishing line about 50 feet up a tree.
3. The real pros are the archers. Forget picking a particular limb, select a tiny branch all the way up to the top of the tree and an archer will lay a line right over the spot and do it the first time. That's how I put support lines into trees. If you add extra weight on the front of the arrow, it will drag the line out of the tree and down to the ground where you can reach it. **A WORD OF CAUTION: YOU CANNOT BE TOO CAREFUL WHEN USING A BOW. IT IS A LETHAL WEAPON. SHOULD AN ARROW GET LOOSE FROM ITS TRAILING LINE, IT CAN TRAVEL A GREAT DISTANCE.**

A fishing sinker or plummet is a weight used to force a lure or bait to increase its rate of sink, anchoring ability, and/or casting distance. Fishing sinkers may be as small as 1/32 of an ounce for applications in shallow water, even smaller for fly fishing applications, or as large as several pounds or considerably more for deep sea fishing. They are formed into nearly innumerable shapes for diverse fishing applications. Environmental concerns surround the usage of most fishing sinker materials. The following photo shows three types of fishing sinkers.

PAPER A: PREPARATION OF A PATENT SPECIFICATION
4 October 2010, Monday
1330 – 1730 hrs

Maximum Time: 4 Hours (includes reading time) Maximum Marks: 100

Document A – Client's write-up of his invention (10/13)

Extracted from wikipedia- http://en.wikipedia.org/wiki/Sinker_(fishing)

Be careful when using sinkers, they can cause damage to persons and objects!

Use light weight monofilament fishing line or something similar as the first line up the tree. A light weight line produces minimum drag on whatever projectile you're hurling over the tree and, ignoring mathematics, this simply means that you can get higher in the tree for the same effort. I use 10 pound test fishing line.

Laying out the monofilament line can be done in two relatively efficient ways. The first involves unwinding enough line off the spool to make the trip up the tree and back down. The line is carefully routed around your meticulously groomed lawn where it can be pulled aloft by the projectile while avoiding a snag that will completely stop the progress of this project.

Having had poor results with the above lawn technique, I discovered casting or spinning fishing reels. A rod isn't necessary, but is useful. Select a reel that will hold at least enough line to

Document A – Client's write-up of his invention (11/13)

make it up and down the tallest trees you ever plan to conquer. The line must come off the reel without any drag at all.

The technique here is simple. One person holds the reel (which is attached to something he can hold on to) and you shoot, throw, or whatever, the line over the selected limb.

The line will then directly support the antenna wire.

PAPER A: PREPARATION OF A PATENT SPECIFICATION
4 October 2010, Monday
1330 – 1730 hrs

Maximum Time: 4 Hours (includes reading time) Maximum Marks: 100

Document A – Client's write-up of his invention (12/13)

Annex 2:

Product leaflet downloaded from www.mydog.com.sg
on 01 September 2010

Mini Ball Collector (20 inches)

The Mini Ball Collector is perfect for smaller dogs. Features a scaled down collection and throwing cup that allows slobber free pick up of the ball. The Mini Ball Collector makes the game

Document A – Client's write-up of his invention (13/13)

of fetch effortless, it does all the work! All play, no slobber with hands free pick up. Compatible with standard size tennis balls. Exercise your dog in a fraction of the time while you do not get tired throwing the ball. Comes in assorted colors, please allow us to choose for you.

Price: S$5.29

End