INTELLECTUAL PROPERTY OFFICE OF SINGAPORE
PATENT AGENTS QUALIFYING EXAMINATION 2010

PAPER C: INFRINGEMENT AND VALIDITY OF SINGAPORE PATENT
6 October 2010, Wednesday
1330 – 1730 hrs

Maximum Time: 4 Hours (includes reading time) Maximum Marks: 100

INTELLECTUAL PROPERTY
OFFICE OF SINGAPORE

INSTRUCTIONS TO CANDIDATES

1. This Paper consists of 25 pages, including this cover page.
2. Write your answers in English. Answers in any other language will not be marked. Answers in illegible handwriting will not be taken into consideration.
3. Only your answers and/or drawings to the question(s) written in the Answer Booklet(s) provided by the Examination Secretariat will be considered. You are to write on one side of each sheet in the Answer Booklet(s).
4. Marks are awarded more for the points selected for discussion and reasoning displayed than for conclusions reached.
5. Information provided in the question(s) may be obtained from actual situations or modified therefrom for the purpose of this examination. You should accept the facts given in the papers. Assume also that the prior art given is exhaustive.
6. Advise the client on infringement and validity of his patent and on the other questions asked by him. Your advice can be in the form of notes or a letter to the client but in either case you must provide the reasons for your advice.

To be continued

PAPER C: INFRINGEMENT AND VALIDITY OF SINGAPORE PATENT
6 October 2010, Wednesday
1330 – 1730 hrs

Maximum Time: 4 Hours (includes reading time) Maximum Marks: 100

7. The documents provided in the question are:

(a) Letter from your Client (includes question) (2 pages);

(b) Document A – Singapore patent no. 1000 ("SG1000") (8 pages of description plus claim and 4 pages of drawing);

(c) Document B – Claims of US patent 222,222 (1 page)

(c) Document C – Windy Product (2 pages of description and 2 pages of drawing);

(d) Document D1 – Prior Art (2 pages of description and 2 pages of drawing);

End

PAPER C: INFRINGEMENT AND VALIDITY OF SINGAPORE PATENT
6 October 2010, Wednesday
1330 – 1730 hrs

Maximum Time: 4 Hours (includes reading time) Maximum Marks: 100

Letter from your Client (1/2)

You receive the following letter.

Dear Patent Agent,

I am the IP counsel for Windy Inc, a US company which is among the leaders in the field of children's adventure playgrounds. Windy Inc has recently purchased completely the US firm, Miller Inc, which went bankrupt earlier this year.

I am attempting to identify which members of their patent portfolio are worth maintaining. We have already identified a number of patent families which would be of interest to us. In most cases this is because they cover technology which we may be interested in exploiting in the future, but certain of their patent families may cover our existing commercial activities, in which case the patents in question would have a greatly increased value to us: we could potentially use them as weapons against any third party which attempts to launch a product substantially identical to our own. Only one of these patents is a Singapore patent: Singapore patent number 1000, which has potential relevance to our product shown by the attached document, "Windy Product".

Please analyze Singapore patent 1000, and give us a frank assessment of whether Singapore patent 1000 does indeed cover the Windy product. If you identify any validity problems with the patent, please let us know, and tell us whether those problems are correctable (and if so, how). We do not require your views on the validity or coverage of any non-Singapore patents.

One of our engineers, upon reading Singapore patent 1000 was reminded of a standard commercial product which, he says, has been in very wide-spread use by civil engineers for several decades. He has discovered the enclosed document D1 describing this device.

Yours sincerely,
C. Green

PAPER C: INFRINGEMENT AND VALIDITY OF SINGAPORE PATENT
6 October 2010, Wednesday
1330 – 1730 hrs

Maximum Time: 4 Hours (includes reading time) Maximum Marks: 100

Letter from your Client (2/2)

You obtain the patent history of Singapore patent 1000, and discover that it was granted based on a Singapore patent application filed on 1 August 2006. The Singapore application claimed Paris Convention priority from a US application 11/222,222 (here called "US2").

You look up US2, and discover that it is part of a patent family having two US members: US2 (filed on 1 August 2005) and US 10/111,111 (here called "US1"). US1 was filed on 1 August 2004, and published on 1 February 2006. US2 is a continuation-in-part of US1. US2 as filed was identical to SG1000 as filed and as granted. US1 was identical to SG1000 also, except that it lacked the portion of SG1000 which is shown in bold font, and it lacked Figs. 5(a)-(c) and Figs. 6(a)-(b).

US1 was withdrawn by the applicant on 1 March 2006, and no office action issued on case US1. On 1 May 2008 the USPTO issued an office action which raised only formal objections to the claims of US2. In response, the applicant amended the claims of US2, and US2 was granted on 2 January 2009 as US patent 222,222. The attached document "Claims of US patent 222,222" shows the claims of US patent 222,222.

Instead of requesting a search and examination conducted by the Singapore Patents Registry, the applicant relied on Section 29(2)(c)(ii). That is, the applicant filed form PF11B on 1 February 2009, supplying the prescribed information relating to US2, and a certified copy of US 222,222. On the same day, the applicant filed form PF14. The SG1000 was granted on 10 January 2010 in exactly the form in which the Singapore patent application was filed.

Since the grant of Singapore patent 1000, no action has been taken by the patentee.

Please draft a response to Mr Green.

PAPER C: INFRINGEMENT AND VALIDITY OF SINGAPORE PATENT
6 October 2010, Wednesday
1330 – 1730 hrs

Maximum Time: 4 Hours (includes reading time) Maximum Marks: 100

Document A- Singapore patent SG 1000 (1/12)

Singapore patent SG 1000

Filed 1 August 2006

Claiming priority from US 11/222,222, filed 1 August 2005

Granted 10 January 2010, in the name of Miller Inc.

Background

Children's playgrounds must provide an exciting experience without exposing children to risk of injury. Accidents can occur when children use even the tamest playground furniture (e.g. climbing frames, slides, swings or roundabouts), but making the articles increasingly safe generally also makes them less exciting to use. For example, a climbing frame less than a metre in height is fairly safe, but is of little interest to a child more than 6 years old.

One widely-known playground system which attempts to address this problem is illustrated in Figs. 1 and 2. Referring first to Fig. 1, a plurality of raised platforms 1, 2, 3 are provided supported by respective posts 11, 12, 13. A ladder 4 is provided so that children can climb up to the platform 1. A taut safety cable 6 extends between all the platforms. One end of the safety cable 6 is releasably attached to the post 11; the other end is attached to the ground at a point 20. A first central portion of the safety cable 6 is attached to the post 12 via a connector 15, and another central portion of the safety cable 6 is attached to the post 13 via a second connector 15. An instructor (not shown) is stationed on platform 1. A child 17 wears a harness 18 including a rider 19. As each child arrives at platform 1, the instructor attaches the rider 19 to the safety cable 6 (by a mechanism which is not shown). This means that the child is completely safe from falling to the ground. As described below, the connectors 15 are such that the rider 19 is able to pass the connectors 15 without being removed from the safety cable 6.

Document A- Singapore patent SG 1000 (2/12)

Narrow bridges 5 extend from post 11 to post 12, and from the post 12 to the post 13. A child starting from platform 1 can gradually walk to platform 3 along the narrow bridges 5. The child can then jump off the platform 3, so that the rider 19 slides along the safety cable 6, and the child, supported by the harness, gradually slides down the safety cable 6, to land near the point 20. If the platforms 1, 2 and 3 are high above the ground, then this exercise is exciting, even for older children, yet the children are completely safe because, if they fall off the bridges 5, they are suspended from their respective harness 18, due to the respective rider 19 which is attached to the safety cable 6. The instructor can then come to rescue them.

Although only three posts 11, 12, 13 are shown, in other forms of the playground there may be a much larger number of posts, arranged in a line. Between each pair of posts is a path (e.g. via a narrow bridge such as bridge 5, or a rope ladder, a rope bridge, etc.), so that children can move successively between the posts. A single safety cable 6 extends from the first post to the point 20, so that a child is attached to the safety cable through the journey from the first post onwards. If there are about ten posts, then about twenty children can use the playground simultaneously. Each child has a respective harness, and the children are spaced apart along the safety cable 6.

Turning to Fig. 2(a) the construction of the safety cable 6 is shown. It is conventional steel rope. The steel rope has a central core 61, around which are wound six strands 62. Each of the strands 62 thus has a helical formation. Each strand 62 has the same construction: it includes a central core wire 63 around which six wires 64 are wound.

As shown in Fig. 2(b), the rider 19 comprises a steel tubular portion 19a of metal defining an elongate hole 21. The tubular portion 19a is for encircling the safety cable 6, and the hole 21 has a diameter slightly larger than the diameter of the safety cable 6. The tubular portion 19a of the rider 19 is attached to a tongue portion 19b, which is for attachment to a harness 18. The tongue portion 19b includes a through-hole 19c for attaching the tongue portion 19b to a harness 18 (not shown in Fig. 2(b)).

Document A- Singapore patent SG 1000 (3/12)

The connector 15 is shown in Fig. 2(c) in perspective view. The connector 15 has a base portion 15a for attachment to one of the posts 12, 13. Extending from the base portion 15a are a pair of curved jaws 15b, 15c, which together define a tubular channel 15d with a generally round cross-section. The channel 15d is large enough to receive the safety cable 6, and to receive the tubular portion 19a of the rider 19 when the tubular portion 19a encircles the safety cable 6. The tips of the jaws 15b, 15c are spaced apart by a gap 15e which is smaller than the diameter of the safety cable 6, but wider than the thickness of the tongue portion 19b of the rider 19. The connector 15 is viewed in Fig. 2(d) looking along the channel 15d.

The base portion15a includes a through-hole 15f. The connector can be connected to one of the posts 12, 13 by a screw (not shown) passing through the through-hole 15f and into the post.

Fig. 2(e) is a perspective view showing the connector 15 in use. The safety cable 6 passes through the tubular channel 15d. The base portion 15a is attached to one of the posts 12, 13 (not shown). Since the safety cable 6 is wider than the gap 15e, the safety cable 6 cannot escape from the tubular channel 15d. The rider 19 moves along the safety cable 6 with its tongue portion 19b attached to a harness (not shown).

When the tubular portion 19a enters the tubular channel 15d, the tongue portion 19b extends out of the connector 15 through the gap 15e, so that the connector 15 does not prevent the rider 19 from moving along the safety cable 6.

A system such as the described one has the considerable disadvantage that the safety cable 6 is free to move through the connectors 15. Thus if the safety cable 6 is tensioned at one point (e.g. because it has to support a child who has jumped off one of the platforms), that tension is transmitted along the safety cable 6. The safety cable 6 moves rapidly through the connectors 15, and although it does not move very far, it may potentially trap and hurt children's fingers near the connectors 15.

PAPER C: INFRINGEMENT AND VALIDITY OF SINGAPORE PATENT
6 October 2010, Wednesday
1330 – 1730 hrs

Maximum Time: 4 Hours (includes reading time) Maximum Marks: 100

Document A- Singapore patent SG 1000 (4/12)

The Invention

The present invention proposes that each connector is enabled to grip the safety cable by a gripping mechanism which nevertheless permits the rider to move along the safety cable past the connector. Since the connector grips the safety cable, tension in the safety cable is not transmitted between portions of the safety cable on respective sides of the connector. Furthermore, no section of the safety cable will move rapidly through the connector. Thus, the problem with known systems is solved.

Brief description of the figures

Prior art is illustrated with reference to Figs. 1 and 2.
An embodiment of the invention is illustrated with reference to Figs. 3 and 4
A second embodiment of the invention is illustrated with reference to Figs. 5 and 6.

Detailed description of the embodiments

An embodiment of the invention is the connector 115 which is shown in Fig. 3, and shown in use in Fig. 4. . This connector 115 is generally similar to the connector 15 shown in Fig. 2, so like portions are labeled by reference numerals which are 100 higher. The connector 115 is generally longitudinally symmetric. It has two jaws 115b, 115c extending from a base portion 115a, and shaped in the same way as the jaws 15b, 15b of the connector 15. The base portion 115a includes a through-hole 115f for attaching the connector 115 to a post, for example using a screw (not shown). A channel 115d is defined between the jaws 115b, 115c, and in Fig. 3 the connector is viewed looking in the direction parallel to the length direction of the channel. The tips of the jaws 115b, 115c define a gap 115e between them.

In contrast to the connector 15, the connector 115 is provided on the inner surface of the jaws 115b, 115c with a rubber lining 115g. The inner surface of the rubber lining 115g faces the channel 115d. In an unstressed state, the diameter of the channel 115d is less than the diameter of the safety cable 6. However, the safety cable can be threaded through channel

Document A- Singapore patent SG 1000 (5/12)

115d, as shown in Fig. 4, thereby compressing the rubber lining 115g outwardly against the jaws 115b, 115c, so that the safety cable 6 is tightly embraced by the connector 115.

The connector 115 is used with a rider identical to the one illustrated in Fig. 2(b). When a rider 19 passes along the safety cable 6, the tubular portion 19a of the rider 19 enters the channel 115d and the rubber lining 115g is compressed outwardly against the jaws 115b, 115c. As the tubular portion 19a of the rider 19 slides within the channel 115d, the tongue portion 19b of the rider 19 extends through the gap 115e. Thus the rider 19 is able to move along the safety cable 6, past the connector 115.

Since in the state shown in Fig. 4, the rubber lining 115g is continually pressing against the safety cable 6, the friction of the rubber lining 115g against the safety cable 6 is great. As a result, if the tension in one part of the cable is suddenly increased (due for instance to a child falling off the bridge 5), this sudden tension is not transmitted to other parts of the safety cable 6 on the other side of the connector 115. Thus, the connector 115 protects children moving along those other parts of the safety cable.

Unfortunately, experimentally it has been found that it is very hard to engineer the rubber lining 115g such that it grips the safety cable 6 satisfactorily without also making it unacceptably hard for a child (or at any rate, for a young child) to move the tubular portion 19a of the rider 19 into and along the channel 115d. This is because the compressed rubber lining 115g bears against the outer surface of the tubular portion 19a of the rider 19, and therefore creates an even greater frictional resistance to movement of the tubular portion 19a through the rubber lining 115g, than the rubber lining 115g provides against movement of the safety cable 6 through the rubber lining 115g.

Accordingly, the inventors devised a second embodiment of the invention. In this embodiment, the connector 215 has the structure illustrated in Figs. 5(a), 5(b) and 5(c). Fig. 5(a) is a view in the length direction of the connector 215. Fig. 5(b) is a perspective view. Fig. 5(c) is a cross-sectional view looking in the direction indicated

Document A- Singapore patent SG 1000 (6/12)

in Fig. 5(b), in a plane A-A. The connector 215 is similar to the known connector 15, and like elements of the connector 215 are illustrated in Figs 5(a)-(c) by reference numerals 200 higher than those in Fig. 2. The connector 215 has elements 215a, 215b, 215c corresponding respectively to the elements 15a, 15b and 15c, and having exactly the same shape respectively. A through-hole 215f is provided for attaching the connector 215 to a post, for example using a screw (not shown). However, unlike the connector 15, the connector 215 additionally comprises a number of teeth 2151, extending into the tubular channel 215d defined between the jaws 215b, 215c, the tips of which are spaced apart by a gap 215e. Each tooth 2151 is supported by a respective spring element 2152.

Fig. 6(a) is a cross-sectional view like Fig. 5(c), but showing a time when a safety cable 6 has been threaded through the tubular channel 215d in the connector 215. The spring elements 2152 are now partially compressed. The spring elements 2152 and the teeth 2151 reliantly maintain the safety cable 6 in a position against the gap 215e.

The teeth 2151 strongly resist movement of the safety cable 6 relative to the connector 215 in the length direction of the channel.

When, as shown in Fig. 6(b), the tubular portion 19a of the rider 19 enters the connector 215 riding on the safety cable 6, it disengages successive ones of the teeth 2151 from the safety cable 6. At the same time, part of the tubular portion 19a close to the tongue portion 19b is inserted between the safety cable 6 and the part of the curved jaws 215b, 215c which is close to the gap 215e.

Supposing that the length of the tubular portion 19a is about an integer *n* times the offset distance *x* between individual teeth (the case n=4 is shown in Fig. 6(b)), then at any moment about *n* of the teeth will be away from the safety cable 6 and bearing against the outer surface of the tubular portion 19a of the rider 19 instead of against the safety cable 6. But these teeth create very little frictional force against the tubular portion 19a since the outer surface of the tubular portion 19a is smooth (unlike the

Document A- Singapore patent SG 1000 (7/12)

surface of the safety cable 6). Moving the rider 19 along the safety cable 6 requires at any instant that at most one of the teeth 2151 is being moved away from the safety cable 6, or in other words that only a single corresponding one of the spring elements 2152 is in the process of being compressed. Specifically, at the moment shown in Fig. 6(b), none of the four teeth 2151 which contacts the tubular portion 19a of the rider 19, is being moved upwards, so there is very little force opposing movement of the rider 19 along the safety cable 6. If the rider 19 moves to the right (as shown in Fig. 6(b)) far enough to contact the tooth shown as M, then the rider 19 will start to move the tooth M upward, thereby compressing the corresponding spring shown as N, but at that moment no other spring 2152 is being compressed. Thus, the force which is required to move the tubular portion 19a along the safety cable 6 is approximately the force required to compress only one of the spring elements 2152. This means that the force which a child has to apply is very much less in the case of the connector 215 than in the case of the connector 115, although it has been found that the connector 215 is actually able to grip the safety cable 6 more strongly than the connector 115. Note that the number and position of the teeth 2151 of the connector 215 are such that the grip which the connector applies to the safety cable 6 is also secure when the rider 19 is passing through the connector 215.

PAPER C: INFRINGEMENT AND VALIDITY OF SINGAPORE PATENT
6 October 2010, Wednesday
1330 – 1730 hrs

Maximum Time: 4 Hours (includes reading time) Maximum Marks: 100

Document A- Singapore patent SG 1000 (8/12)

Claims

1. A connector for gripping a safety cable of a children's playground, the connector defining a channel for receiving a tubular portion of a rider for a harness, and an elongate gap at the edge of the channel, whereby the safety cable can be positioned with a portion of the safety cable extending through the channel, and a rider can be moved along the safety cable with a tubular portion of the rider surrounding the safety cable and moving within the channel, and a tongue portion of the rider extending out of the gap for connection to a harness,

characterized in that resilient means are provided within the channel bearing against the safety cable.

2. A connector for gripping a safety cable of a children's playground, the connector defining a channel for receiving a tubular portion of a rider for a harness, and an elongate gap at the edge of the channel, whereby the safety cable can be positioned with a portion of the safety cable extending through the channel, and a rider can be moved along the safety cable with a tubular portion of the rider surrounding the safety cable and moving within the channel, and a tongue portion of the rider extending out of the gap for connection to a harness,

the connector comprising a plurality of teeth in a series extending along substantially the whole of the channel and resiliently urged towards an opposing internal surface of the channel.

3. A connector according to claim 2 in which the plurality of teeth are independently urged towards the opposing internal surface of the channel.

PAPER C: INFRINGEMENT AND VALIDITY OF SINGAPORE PATENT
6 October 2010, Wednesday
1330 – 1730 hrs

Maximum Time: 4 Hours (includes reading time) Maximum Marks: 100

Document A- Singapore patent SG 1000 (9/12)

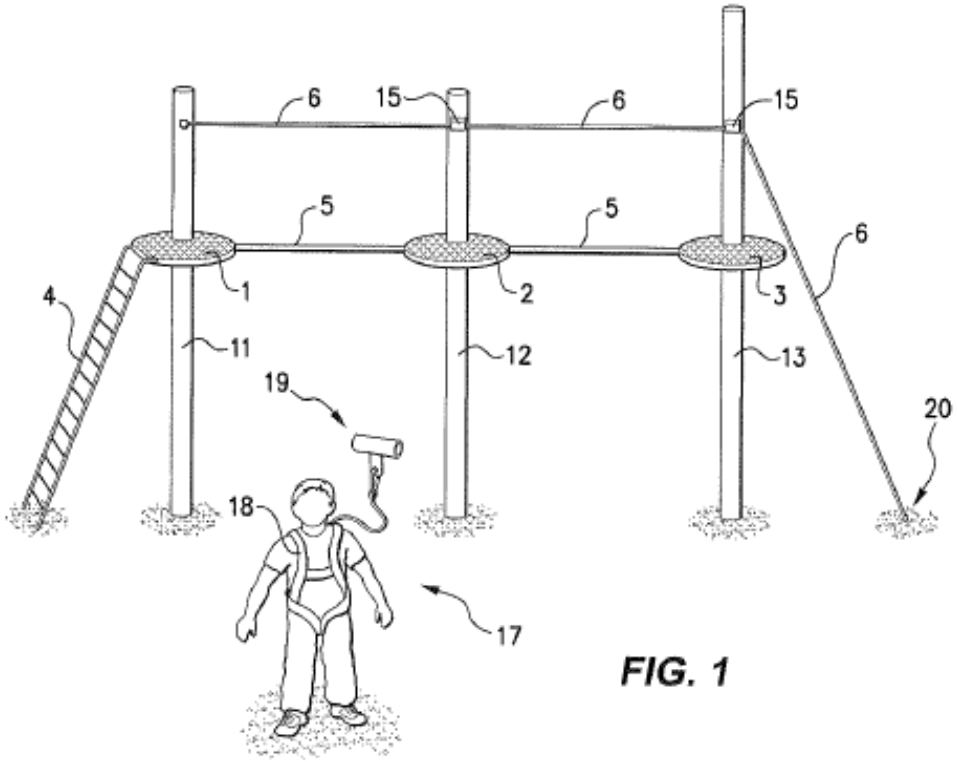

FIG. 1

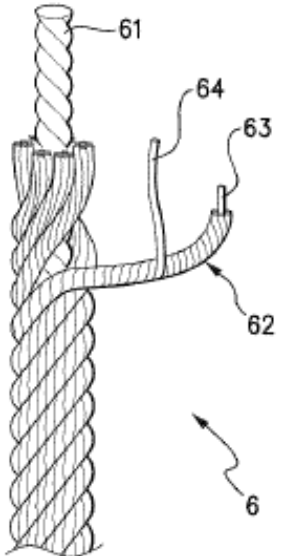

FIG. 2 (a)

PAPER C: INFRINGEMENT AND VALIDITY OF SINGAPORE PATENT
6 October 2010, Wednesday
1330 – 1730 hrs

Maximum Time: 4 Hours (includes reading time) Maximum Marks: 100

Document A- Singapore patent SG 1000 (10/12)

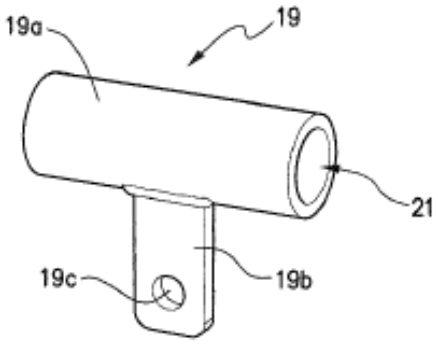

FIG. 2(b)

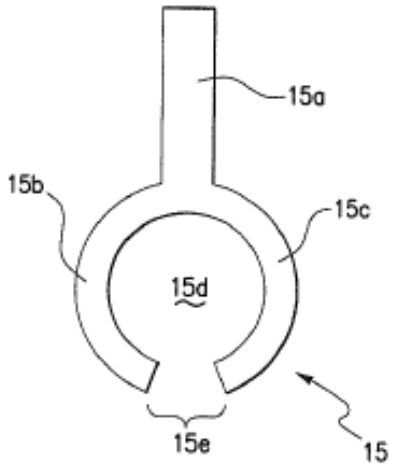

FIG. 2(d)

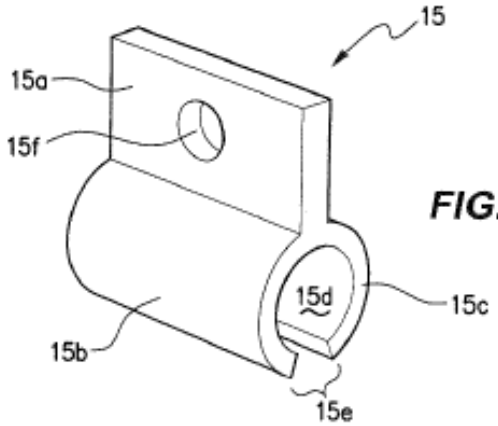

FIG. 2(c)

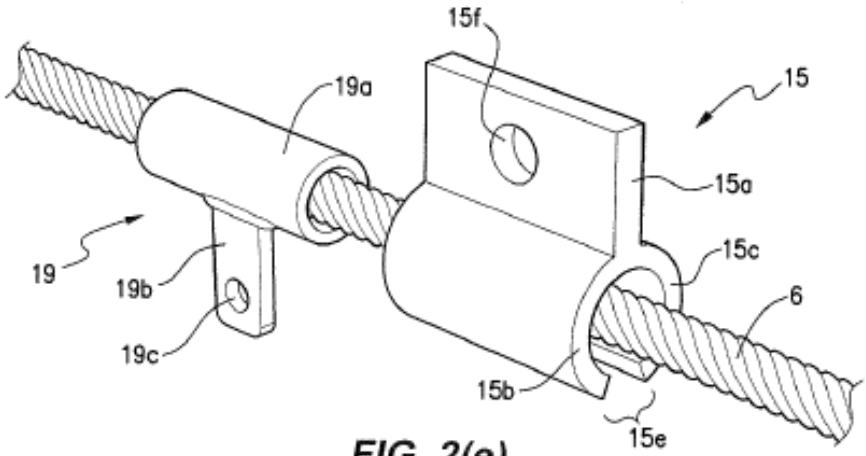

FIG. 2(e)

PAPER C: INFRINGEMENT AND VALIDITY OF SINGAPORE PATENT
6 October 2010, Wednesday
1330 – 1730 hrs

Maximum Time: 4 Hours (includes reading time) Maximum Marks: 100

Document A- Singapore patent SG 1000 (11/12)

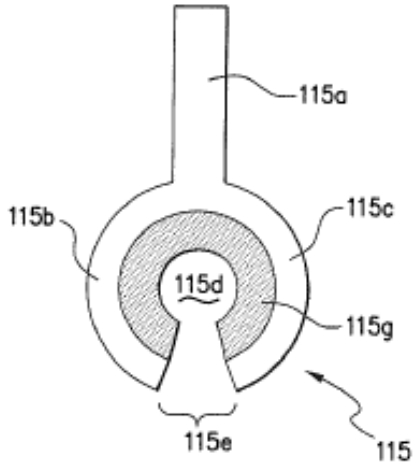

FIG. 3

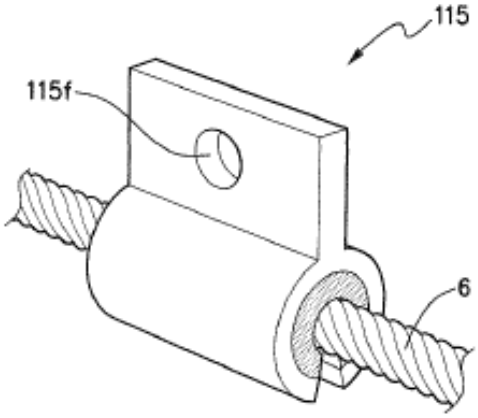

FIG. 4

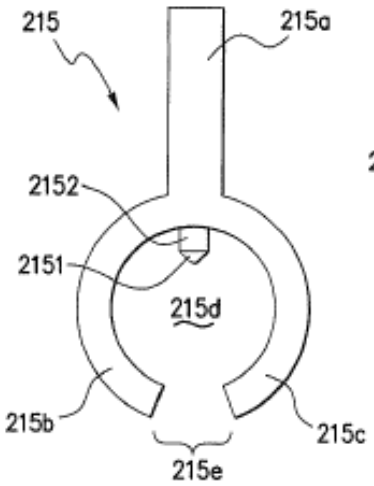

FIG. 5(a)

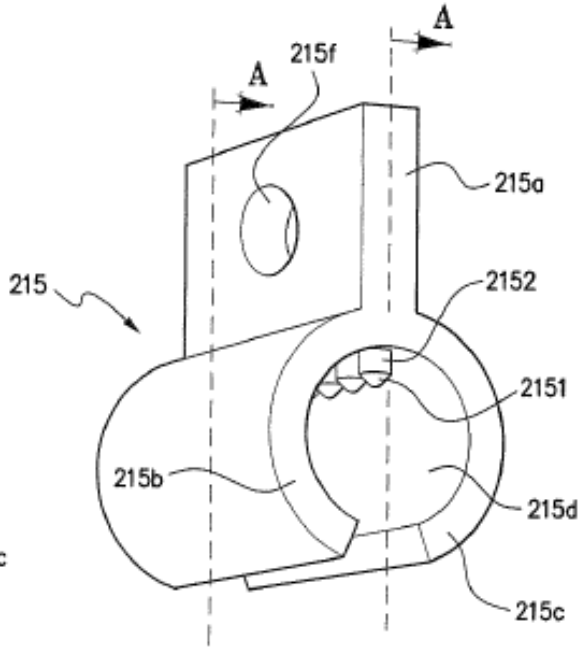

FIG. 5(b)

PAPER C: INFRINGEMENT AND VALIDITY OF SINGAPORE PATENT
6 October 2010, Wednesday
1330 – 1730 hrs

Maximum Time: 4 Hours (includes reading time) Maximum Marks: 100

Document A- Singapore patent SG 1000 (12/12)

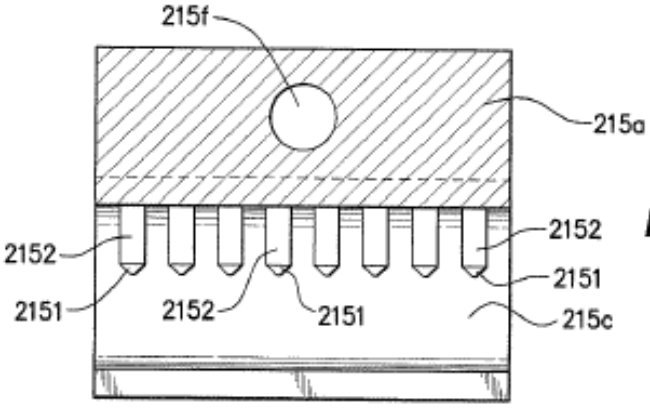

FIG. 5(c)

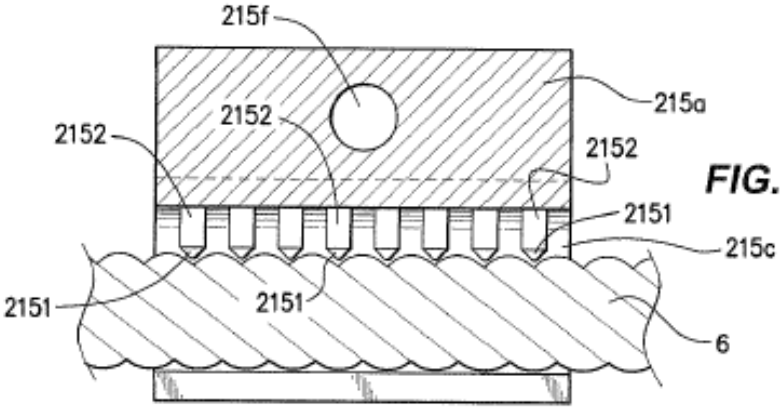

FIG. 6(a)

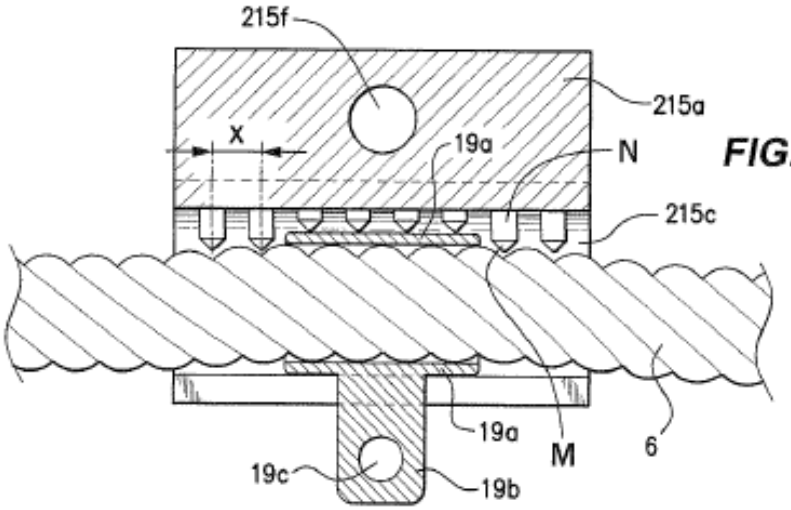

FIG. 6(b)

PAPER C: INFRINGEMENT AND VALIDITY OF SINGAPORE PATENT
6 October 2010, Wednesday
1330 – 1730 hrs

Maximum Time: 4 Hours (includes reading time) Maximum Marks: 100

Document B – Claims of US patent 222,222 (1/1)

Claims of US patent 222,222

1. A connector for gripping a safety cable of a children's playground, the connector defining an elongate channel for receiving a tubular portion of a rider for a harness, and an elongate gap at the edge of the channel, whereby the safety cable can be positioned with a portion of the safety cable extending through the channel, and a rider can be moved along the safety cable with a tubular portion of the rider surrounding the safety cable and moving within the channel, and a tongue portion of the rider extending out of the gap for connection to a harness,

the connector comprising a rubber element with a C-shaped cross section provided within the channel

2. A connector for gripping a safety cable of a children's playground, the connector defining an elongate channel for receiving a tubular portion of a rider for a harness, and an elongate gap at the edge of the channel, whereby the safety cable can be positioned with a portion of the safety cable extending through the channel, and a rider can be moved along the safety cable with a tubular portion of the rider surrounding the safety cable and moving within the channel, and a tongue portion of the rider extending out of the gap for connection to a harness,

the connector comprising a plurality of teeth, resiliently and independently urged towards an opposing internal surface of the channel.

PAPER C: INFRINGEMENT AND VALIDITY OF SINGAPORE PATENT
6 October 2010, Wednesday
1330 – 1730 hrs

Maximum Time: 4 Hours (includes reading time) Maximum Marks: 100

Document C – Windy Product (1/4)

Windy Product

The product is a connector for gripping a portion of a wire rope, yet permitting a rider to move along the wire rope past the connector.

The connector is shown in perspective view in Fig. 1. In Fig. 2 it is shown viewed along the direction marked as B in Fig. 1. In Fig. 3 it is shown in a cross-sectional view, which is in the plane marked as A-A in Fig. 1. The connector has a tubular housing 1 with a generally rectangular cross-section, and including a slot 2 along its whole length "*d*". Within the housing 1 are four teeth 3 which are supported by respective resilient elements 4, which hang down from the downwardly-facing internal surface 7. The housing is provided with two lugs 5 on its upper surface (as viewed in Fig. 1) each having a circular through-hole 6.The lugs 5 allow the connector to be attached to a fixed point, such as a post. The tips of the teeth 3 lie a distance "*e*" above the inner surface 8 of the housing which is interrupted by the slot 2.

A wire rope 9 may be threaded through the connector parallel to the direction B. The wire rope 9 has a diameter greater than distance *e*, so the teeth 3 are displaced upwards, compressing the resilient elements 4. This is illustrated by the view of Fig. 4 which is the how the cross-sectional view of Fig. 3 would be modified by the presence of the wire rope 9. The teeth 3 are therefore urged downward by the resilient element 4, pressing the wire rope 9 against the surface 8. The wire rope 9 is too wide to fit through the slot 2, so it is gripped between the teeth 3 and the surface 8.

The connector is compatible with a rider 10 shown in Fig. 5 which has a tubular portion 10a and a tongue 10b. A through-hole 10c is provided in the tongue 10b. The through-hole 10c is useful for attaching the tongue 10b to another object (as described below). The wire rope 9 is threaded through the tubular portion 10a, so that the rider 10 can slide along the wire rope 9.

Document C – Windy Product (2/4)

The tubular portion 10a of the rider 10 is small enough to enter the tube defined by the housing 1, as shown in Fig. 6, with the tongue 10b exiting from the housing 1 through the slot 2. As the tubular portion 10a of the rider 10 slides along the wire rope 9, it disengages the teeth 3 from the wire rope. Up to two teeth 3 are disengaged at each time. At least two teeth grip the wire rope 9 at each time, and prevent the wire rope 9 from sliding within the housing 1.

Our principal markets for the connector are as: (i) connectors for holding guide ropes for undersea robots (in this case, the tongues 10b of the riders 10 are attached to the robots, and the wire rope is a guide rope for the robots), (ii) connectors for holding safety cables for children's playgrounds (in this case, the tongues 10b of the riders 10 are attached to harnesses worn by the children). We do not supply the riders 10, which are standard commercial products.

The connectors are for use with many different types of wire rope, having different diameters and surface shapes. The only requirement for the wire rope to be suitable for the connector is that the wire rope's diameter is small enough for the wire rope to be threaded through the tubular housing 1, but greater than the width of the slot 2.

Having said that, we have designed the housing 1 to be only slightly larger than the wire ropes which are conventional safety cables used in a children's playground, so that there is very little space for a child to insert their finger into the housing to one side of the safety cable. The finger therefore cannot be inserted far, and all the teeth are at least a distance "*c*" from the ends of the housing which is a quarter of the total length *d,* so it is unlikely that a child's finger can enter the housing 1 far enough to touch one of the teeth 3, and inadvertently be nipped between the teeth 3 and the safety cable 9.

PAPER C: INFRINGEMENT AND VALIDITY OF SINGAPORE PATENT
6 October 2010, Wednesday
1330 – 1730 hrs

Maximum Time: 4 Hours (includes reading time) Maximum Marks: 100

Document C – Windy Product (3/4)

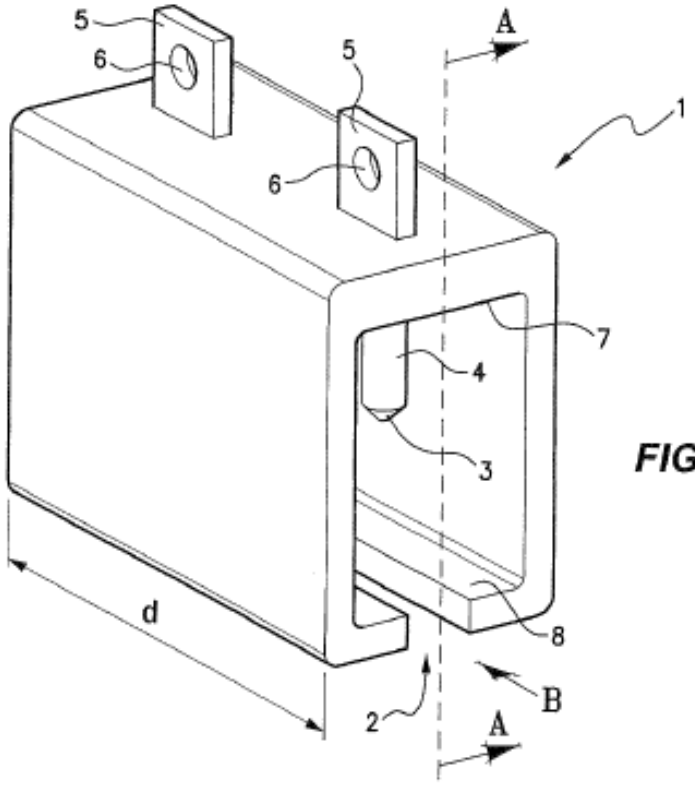

FIG. 1

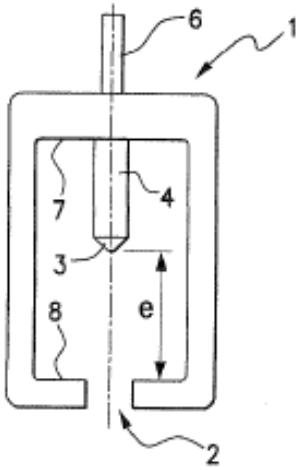

FIG. 2

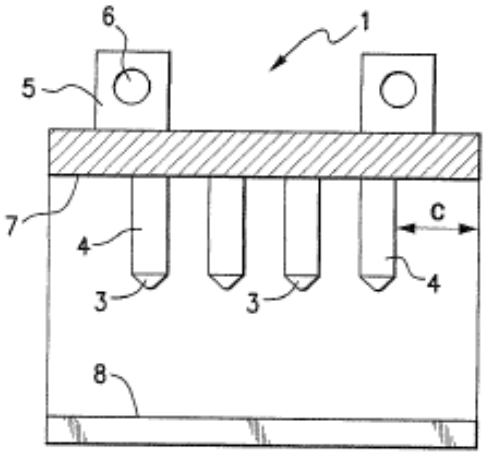

FIG. 3

PAPER C: INFRINGEMENT AND VALIDITY OF SINGAPORE PATENT
6 October 2010, Wednesday
1330 – 1730 hrs

Maximum Time: 4 Hours (includes reading time) Maximum Marks: 100

Document C – Windy Product (4/4)

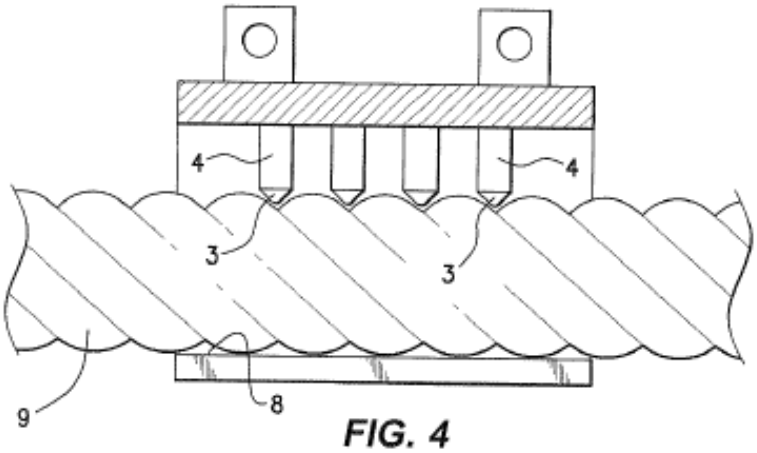

FIG. 4

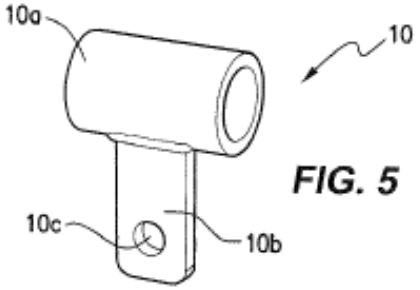

FIG. 5

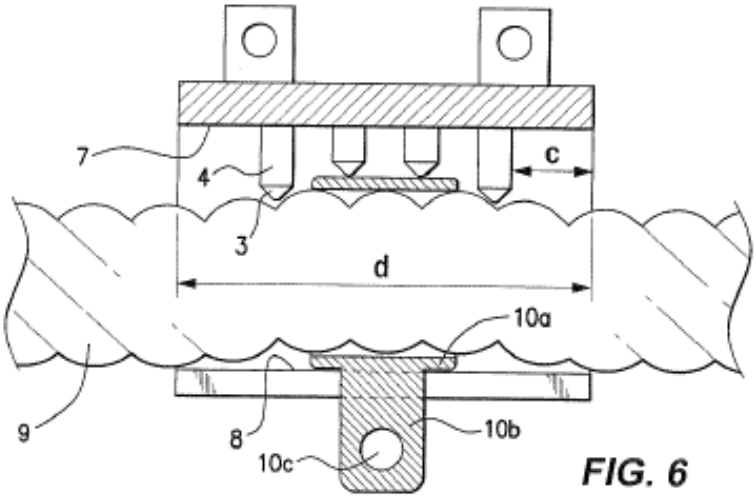

FIG. 6

PAPER C: INFRINGEMENT AND VALIDITY OF SINGAPORE PATENT
6 October 2010, Wednesday
1330 – 1730 hrs

Maximum Time: 4 Hours (includes reading time) Maximum Marks: 100

Document D1- Prior Art (1/4)

D1

Published 1 Jan 2005

There are several situations in which it is useful to fix a wire rope to a wall. In these circumstances, it is known to position grippers at the desired connections on the wall, such that if the wire rope is threaded through the grippers, each gripper releasably holds a respective portion of the wire rope. The present document describes such a gripper which has been widely known by mechanical engineers for several decades.

Fig. 1 shows the gripper in perspective view. Fig. 2 shows the gripper viewed in the direction indicated as B in Fig. 1. Fig. 3 shows the gripper in cross-sectional view, looking in the plane indicated as A-A in Fig. 1. The gripper has a tubular housing 1 with a generally square cross section. That is, it defines a channel with a square cross-section. On an upper outer surface 2 of the housing are formed two lugs 3, each with a circular through-hole 4. The lugs are for mounting the gripper on an erection such as a building. On the internal surface of the housing 1 which is furthest from the surface 2 (but which faces in the same direction) is formed an elastomer layer 5, covering the internal surface. A flat tongue 6 is adhered to the housing 1 using the elastomer layer 5. The tongue has a width x which is about the same as the width of the channel defined by the housing 1, but its length is longer than the length d of the housing, so that the tongue projects out of the housing 1 at both ends of the housing. The tongue 6 has an upper surface formed with a plurality of teeth 7.

The gripper is used as follows. First it is connected to its desired location using the lugs 3. Then, the tongue is manually pushed in the direction shown as *y* on Fig. 3, thereby compressing the elastomer layer 5. This creates enough space within the housing 1 to thread a wire rope 8 through the housing. The tongue is then released, so that expansion of the elastomer layer 5 pushes the tongue 6 against the outer surface of the wire rope 8, thereby forcing the teeth 7 against the surface of the wire rope 8. This is shown in Fig. 4, which is a cross-sectional view looking in the same plane as Fig 3.

Document D1- Prior Art (2/4)

The gripper comes in a number of forms, each suitable for use with a different sort of wire rope 8. In each case, the teeth 7 of the gripper are shaped and arranged on the tongue 6 to optimize the gripping force which the teeth 7 apply to the wire rope 8.

Fig. 5 illustrates one known use of the gripper 1. The grippers 1 are provided at multiple locations on the surface of a wall 11. A wire rope 8 is threaded through the grippers 1. The wall 11 also contains a number of projections 9. This structure may be used by young adults practicing mountaineering, since climbing the wall 11 is similar to climbing a rock-face on which an earlier climber has secured a mountaineering rope using anchors. Note that if one section of the rope 8 is tensioned by a climber climbing on it, that tension is not transmitted to other portions of the rope on the other side of one of the grippers, so one climber cannot destabilize others.

PAPER C: INFRINGEMENT AND VALIDITY OF SINGAPORE PATENT
6 October 2010, Wednesday
1330 – 1730 hrs

Maximum Time: 4 Hours (includes reading time) Maximum Marks: 100

Document D1- Prior Art (3/4)

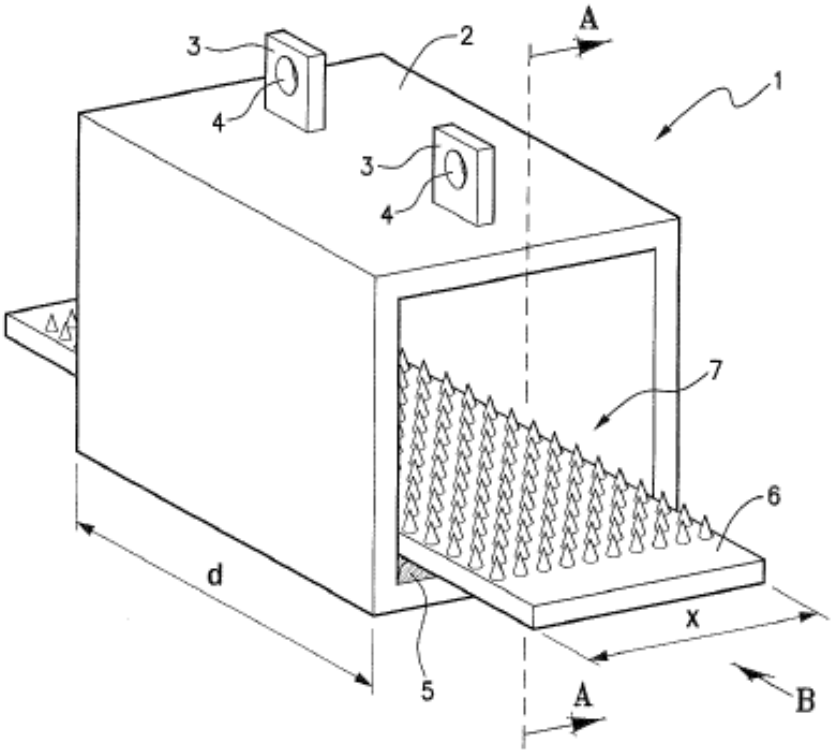

FIG. 1

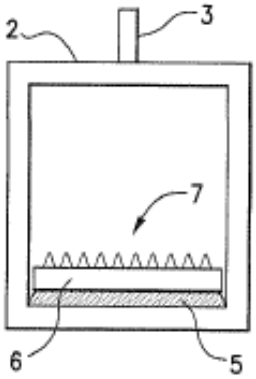

FIG. 2

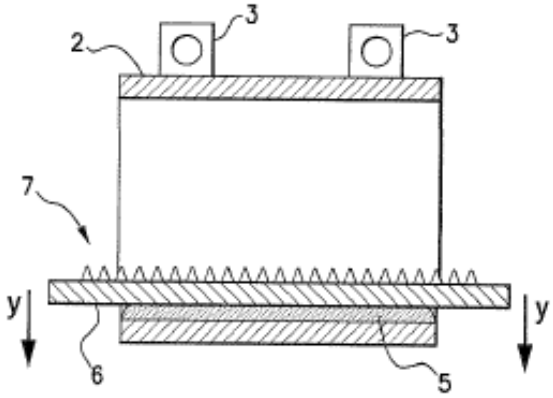

FIG. 3

PAPER C: INFRINGEMENT AND VALIDITY OF SINGAPORE PATENT
6 October 2010, Wednesday
1330 – 1730 hrs

Maximum Time: 4 Hours (includes reading time) Maximum Marks: 100

Document D1- Prior Art (4/4)

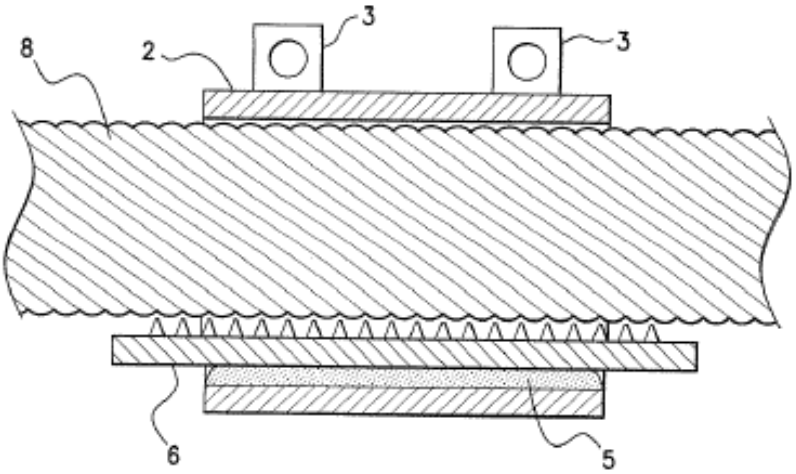

FIG. 4

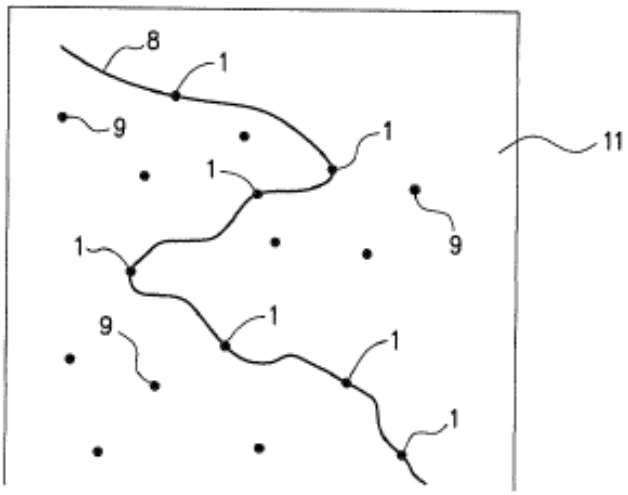

FIG. 5

End