INTELLECTUAL PROPERTY OFFICE OF SINGAPORE

PATENT AGENTS QUALIFYING EXAMINATION

PAPER C: INFRINGEMENT AND VALIDITY OF SINGAPORE PATENT
24 November 2004, Wednesday
1400 – 1730 hrs

Maximum Time: 3 Hours + 30 Minutes of reading time **Maximum Marks: 100**

LIGHTING UP YOUR CREATIVITY

INSTRUCTIONS TO CANDIDATES

1. This Paper consists of 11 sheets, including this cover sheet.
2. 30 minutes of reading time is provided. You are not allowed to write in the Answer Booklet(s) during this reading time.
3. Write your answers in English. Answers in any other language will not be marked.
4. Only your answers to the question(s) written or glued in the Answer Booklet(s) provided by the Examination Secretariat would be considered. You are advised to write on one side of each sheet in the Answer Booklet(s) and to commence your answer to each question (where applicable) on a fresh sheet.
5. Write on one side of the paper only.
6. Marks are awarded more for the points selected for discussion and reasoning displayed than for conclusions reached.
7. You should accept the facts given in the papers and not use any special knowledge you may have. Assume also that the prior art given is exhaustive.

PAPER C: INFRINGEMENT AND VALIDITY OF SINGAPORE PATENT
24 November 2004, Wednesday
1400 – 1730 hrs

Maximum Time: 3 Hours + 30 Minutes of reading time **Maximum Marks: 100**

Your client writes to you:

"We are manufacturers of containers for edible liquids such as water, oil and the like, which containers have a tap for withdrawing the contents. Of course containers having a tap have been known for a long time. Examples are barrels of wood, metal and earthenware. However we have developed a new form of container for which we have obtained Singapore Patent 112233, a copy of which is attached. The Patent is in force. The details of our new container and its advantages over known forms of container are explained in our Patent Specification.

Recently we noticed a competing container, details of which are set out in the competitor's leaflet also attached. It seems to us that the competitor is using our invention.

The competitor is importing the container with a fitted tap into Singapore and selling the products to food producers who fill the container and subsequently sell the container directly to the public or to a retail outlet.

Please let us know if we can take action to stop this competition and if so against whom."

You make a search and discover U.S. Patent No.5067636 and UK Patent Application No 2110805, both of which are published before the priority date of the client's Patent. Extracts of the relevant parts of those documents are also attached.

Prepare notes on the advice you give the client particularly on infringement and validity of the client's Patent, what steps, if any, could be taken to improve the validity of the patent and what action the client might take.

PAPER C: INFRINGEMENT AND VALIDITY OF SINGAPORE PATENT
24 November 2004, Wednesday
1400 – 1730 hrs

Maximum Time: 3 Hours + 30 Minutes of reading time **Maximum Marks: 100**

Singapore Patent 112233

This invention relates to containers for liquids.

Containers for liquids are well known. Common examples are barrels used for water, wine and the like. One of the problems with these containers is that when liquid is withdrawn, for example by means of a tap, air must be admitted into the container to replace the volume of withdrawn liquid. For liquids that are affected by contact with air this is a major disadvantage to using these containers. Proposals have been made for supplying an inert gas, such as nitrogen, instead of air to replace liquid withdrawn from a container but these systems are expensive.

The present invention has for its object a container from which liquid can be dispensed without bringing air into contact with the liquid remaining in the container.

According to the invention, there is provided a container comprising a housing, a liner in the housing, a tap connected to the liner, said tap being adapted to extend from the liner to the exterior of the housing.

With the invention the liner will collapse as liquid is dispensed via the tap. Air to replace withdrawn liquid enters the housing but is prevented from contacting the stored liquid by the intervening liner.

A specific embodiment of the invention will now be described by way of example with reference to the accompanying drawing in which:

Figure 1 is a perspective view of a container with the tap in the stored position, and

Figure 2 shows the container of Figure 1 but with the tap in position to deliver liquid from the container.

Referring to the drawing a container comprises an outer, relatively rigid, housing 10 of, for example cardboard. In the embodiment shown the housing 10 is a box of rectangular section but the precise shape is not significant. A closed, flexible liner of liquid-tight material such as polyester or polyethylene is provided in the housing but is not attached to the housing.

A tap 14 is connected to the liner. As shown in Figure 1 the tap is located inside the housing and near the bottom thereof. In this condition the container can be stored and there is no possibility of accidentally operating the tap and discharging the liquid contents.

A handle 16 is provided at the top of the housing for lifting and carrying the container.

An area 18 of the side wall 20 of the housing 10 lying over the location of the tap has a weakened periphery and can be removed. To use the container the area 18 is removed and the tap thereby exposed is pulled out of the housing to the position shown in Figure 2. The liquid contents of the container can now be dispensed.

As the contents of the liner is withdrawn the liner collapses and no air is admitted therein so that the contents are unaffected by air during the time that the container is being emptied.

In the embodiment shown in the drawing, the tap is positioned adjacent the bottom of the container. However it is possible to locate the tap, and the corresponding removable area 18 of the housing, at the top of the container that is to say on the

side where the handle is located. In use this embodiment is rotated through 90° to bring the tap into a position at the bottom of the container.

Claims

1. A container comprising a housing, a liner in the housing, a tap connected to the liner, said tap being adapted to extend from the liner to the exterior of the housing.

2. A container as claimed in claim 1, wherein the tap is stored in the housing.

3. A container as claimed in claim 1 or claim 2, wherein the tap is located adjacent the bottom of the container.

4. A container as claimed in claim 1 or claim 2, wherein the tap is located at the top of the container.

PAPER C: INFRINGEMENT AND VALIDITY OF SINGAPORE PATENT
24 November 2004, Wednesday
1400 – 1730 hrs

Maximum Time: 3 Hours + 30 Minutes of reading time **Maximum Marks: 100**

Singapore Patent 112233

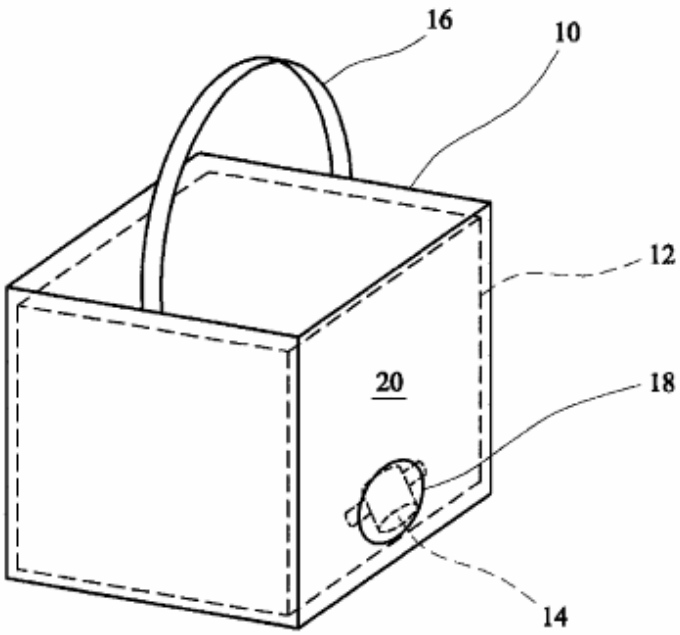

FIG. 1

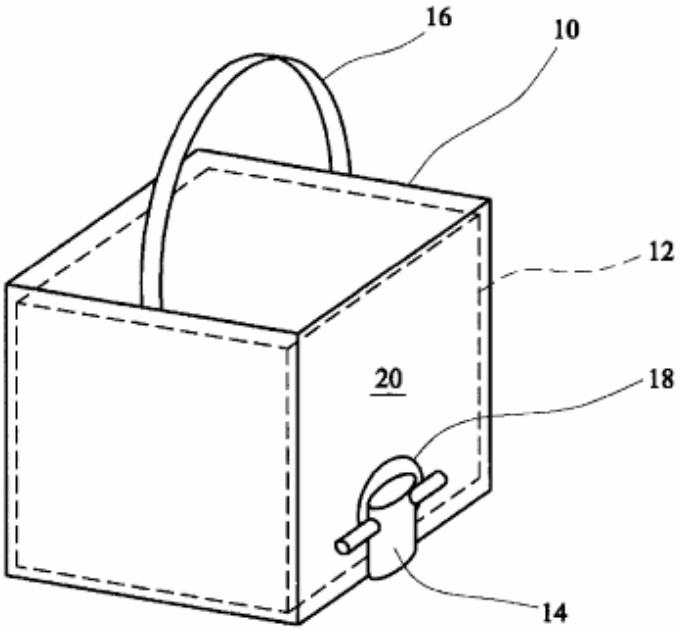

FIG. 2

PAPER C: INFRINGEMENT AND VALIDITY OF SINGAPORE PATENT
24 November 2004, Wednesday
1400 – 1730 hrs

Maximum Time: 3 Hours + 30 Minutes of reading time **Maximum Marks: 100**

Competitor's Leaflet

A new bag-in-box type container with unique recoverable and reusable tap

The bag-in-box container has a rigid cardboard casing and a plastic inner casing. An aperture is provided in the cardboard casing through which the sharp end of a tap is pushed. The sharp end penetrates the plastic inner casing which is deformed and forms a seal around the tap (see illustration below of section through a tap inserted into a container). When the container is empty the tap can be withdrawn and used again.

The tap is fitted to the container prior to sale of the container.

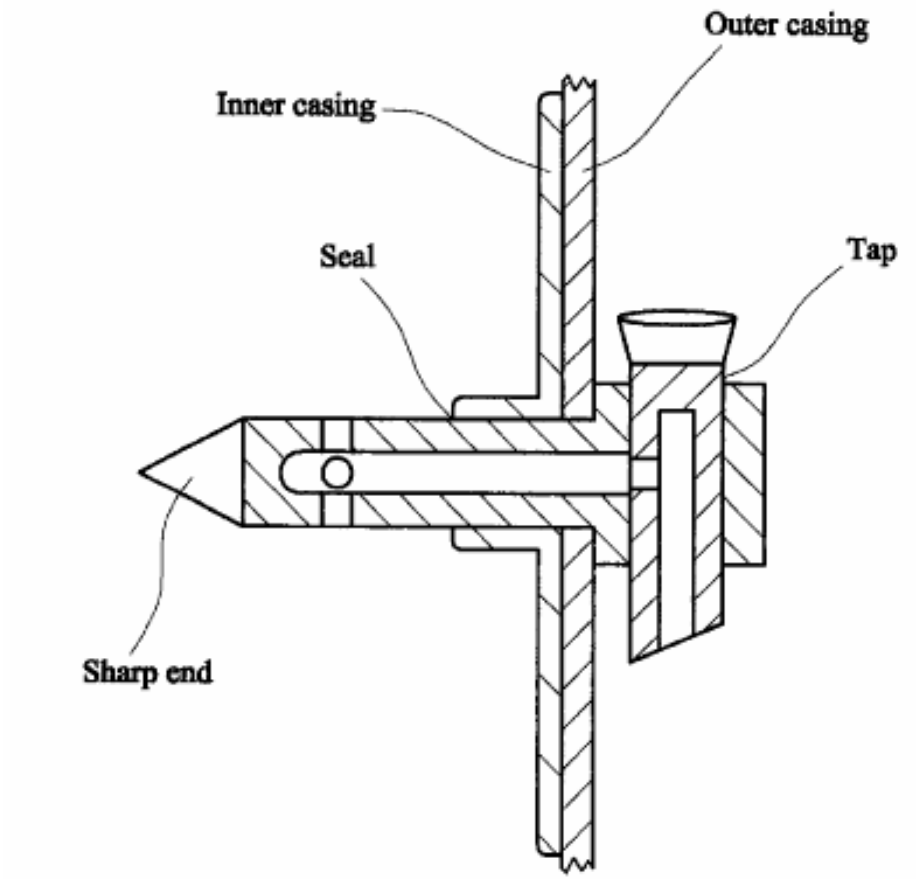

PAPER C: INFRINGEMENT AND VALIDITY OF SINGAPORE PATENT
24 November 2004, Wednesday
1400 – 1730 hrs

Maximum Time: 3 Hours + 30 Minutes of reading time **Maximum Marks: 100**

US Patent 5,067,636 (Extract)

Figure 1 is a diagrammatic cross sectional view illustrating the container.

The container of the invention is intended for transportation and storage of material in powder form.

Basically the assembly comprises a load bearing outer container 1 of thermoplastic material and an internal container 2 in the form of a sack made from plastic foil.

The inner container is shaped to conform substantially to the outer container when the inner container is filled with flowable material.

The outer container has an outer surface 3 having an outlet pipe spigot 5 near the base 4 of the outer container. The spigot 5 is externally threaded at 6. A valve 11 is threaded onto the threaded spigot. The valve 11 is provided with a removable cap 7.

The outer container has an upper wall 8 formed with an aperture 9. The empty sack 2 is inserted into the outer container through the aperture 9 and flexible hose spigot 10 fitted through the pipe spigot 5.

The sack is provided with a filling aperture 12 which can be covered with a cap 13.
The filled sack is supported by the outer container and can be emptied through the valve 11 under the influence of gravity.

PAPER C: INFRINGEMENT AND VALIDITY OF SINGAPORE PATENT
24 November 2004, Wednesday
1400 – 1730 hrs

Maximum Time: 3 Hours + 30 Minutes of reading time **Maximum Marks: 100**

US Patent 5,067,636

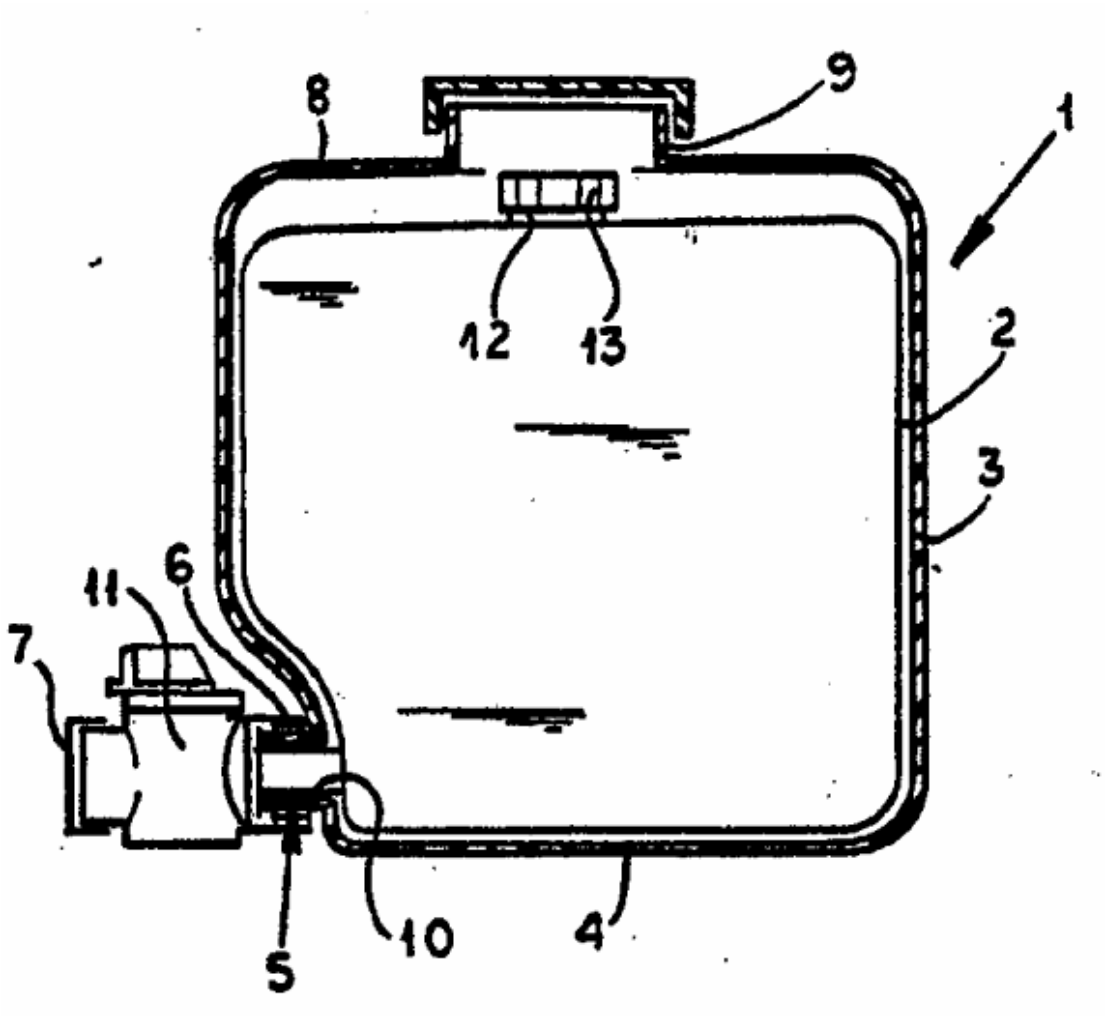

FIG. 1

PAPER C: INFRINGEMENT AND VALIDITY OF SINGAPORE PATENT
24 November 2004, Wednesday
1400 – 1730 hrs

Maximum Time: 3 Hours + 30 Minutes of reading time **Maximum Marks: 100**

UK Patent Application GB 2 110 805 (Extract)

Figure 1 is a perspective view of the invention, and

Figure 2 illustrates how the invention is assembled. The drawings show a barrel shaped container 10 of two part construction comprising a hollow lower section with base 14 and a removable upper section 16. A circular aperture 18 is provided in the wall of the lower section.

In use the upper section is removed and a container 20 placed in the lower section with the tap 22 of the container protruding through the aperture 18.

The space between the container 10 and the container 20 can be filled with ice when it is desired to chill the contents of container 20.

PAPER C: INFRINGEMENT AND VALIDITY OF SINGAPORE PATENT
24 November 2004, Wednesday
1400 – 1730 hrs

Maximum Time: 3 Hours + 30 Minutes of reading time **Maximum Marks: 100**

GB 2 110 805

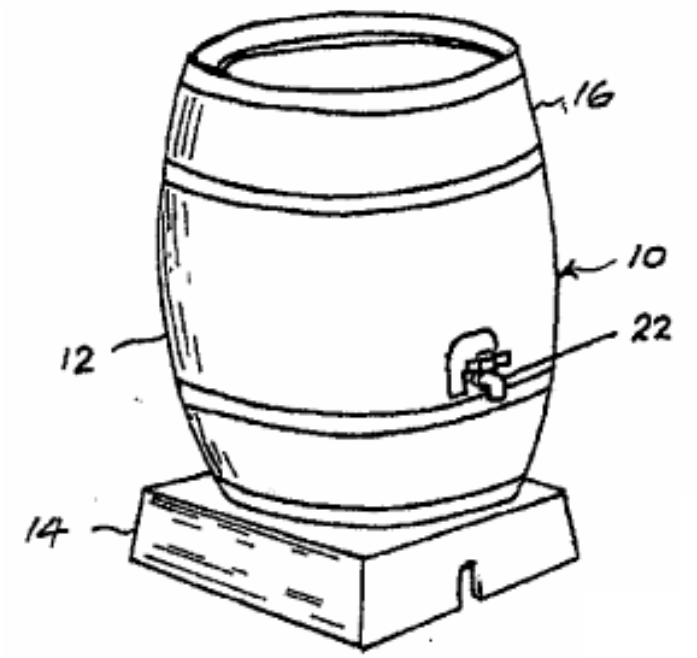

FIG. 1

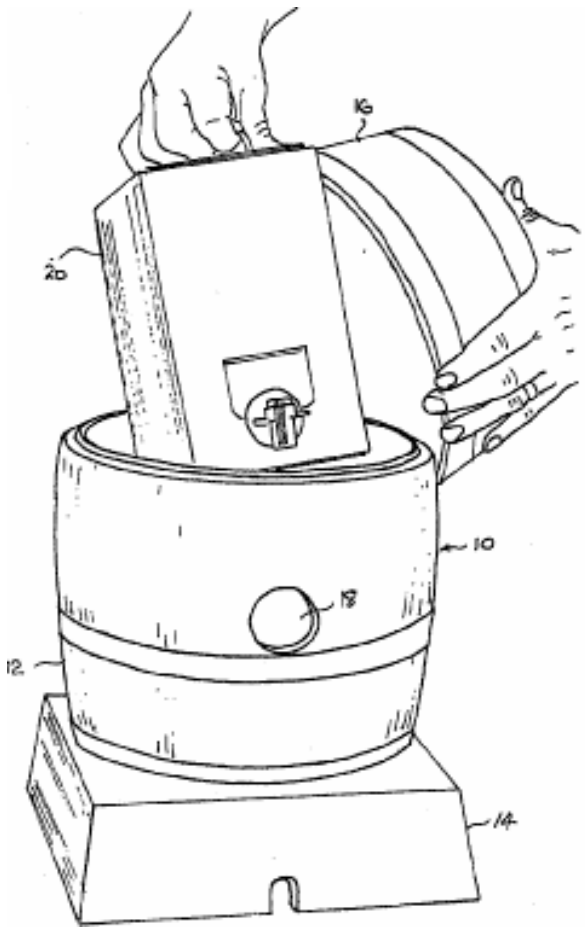

FIG. 2