INTELLECTUAL PROPERTY OFFICE OF SINGAPORE

PATENT AGENTS QUALIFYING EXAMINATION

PAPER A: PREPARATION OF A PATENT SPECIFICATION DRAFTING
22 November 2004, Monday
1400 – 1730 hrs

Maximum Time: 3 Hours + 30 Minutes of reading time **Maximum Marks: 100**

LIGHTING UP YOUR CREATIVITY

INSTRUCTIONS TO CANDIDATES

1. This Paper consists of 13 sheets, including this cover sheet.
2. 30 minutes of reading time is provided. You are not allowed to write in the Answer Booklet(s) during this reading time.
3. Write your answers in English. Answers in any other language will not be marked.
4. Only your answers to the question(s) written or glued in the Answer Booklet(s) provided by the Examination Secretariat would be considered. You are advised to write on one side of each sheet in the Answer Booklet and to commence your answer to each question (where applicable) on a fresh sheet.
5. Clean copies of the drawings on pages 10 to 13 are provided for your use (optional) in your answers.
6. Write on one side of the paper only.
7. You should accept the facts given in the paper and not use any special knowledge you may have. Assume also that the prior art given is exhaustive.

PAPER A: PREPARATION OF A PATENT SPECIFICATION DRAFTING
22 November 2004, Monday
1400 – 1730 hrs

Maximum Time: 3 Hours + 30 Minutes of reading time **Maximum Marks: 100**

CLIENT'S LETTER

Patent Agent
Ace Patent Firm
Biketown, State

Re: Urgent request for drafting a patent application for variable shock absorber for bicycle

Dear Madam/Sir,

We are manufacturers of mountain bikes and accessories. Recently we attended an exhibition of outdoor sports equipment in Biketown.

We came across an exhibitor from North Asia with an interesting range of products. Among the soon-to-be available products, we identified one in particular for further evaluation.

We signed a non-disclosure agreement with the exhibitor and subsequently obtained further technical information from its R & D department on a variable shock absorber for bicycles. Our sales and marketing departments feel that this new product will be a big hit with our mountain bike customers.

It is common for mountain bikes to feature shock absorbers to dampen the bumps when they go over uneven surfaces. However, on steep downward inclines, braking without decreasing the dampening capacity of the suspension system exposes a rider to increased risk of fall and crashes.

We attach for your reference a series of four pre-production drawings describing the new variable shock absorber. Outwardly, the variable shock absorber looks like

preexisting telescopic shock absorbers that one finds in the front fork of mountain bikes. The difference is that the brake levers are not only connected to the brake members, but also the shock absorbers. The variable shock absorber incorporates a regulator in the shape of a valve disc. The valve disc has a number of through holes of different dimensions. The valve disc controls the flow of compressible fluid (e.g. nitrogen) and non-compressible fluid (e.g. oil) within the shock absorber chamber.

In operation, movement of the brake levers translates into twisting motion in the variable shock absorber. This in turn actuates the valve disc to reduce the extent of fluid communication between the compartments of the shock absorber. This is how the dampening function of the shock absorber can be varied automatically.

Confidentially, our management has decided to purchase rights to this variable shock absorber from the North Asian exhibitor. We would like you to file a new patent application before we announce the launching of this new product for our high end mountain bikes in an exhibition in Europe.

As a veteran in the bicycle business, I feel that the frontal bicycle suspension system featured in U.S. Patent 4,971,344 comes closest to the idea of our North Asian exhibitor. See, drawings and summary of this unique invention.

In view of our company's plan to launch the variable shock absorber soon, please draft a patent application for our management's review urgently.

Sincerely yours,

R & D Manager

PAPER A: PREPARATION OF A PATENT SPECIFICATION DRAFTING
22 November 2004, Monday
1400 – 1730 hrs

Maximum Time: 3 Hours + 30 Minutes of reading time **Maximum Marks: 100**

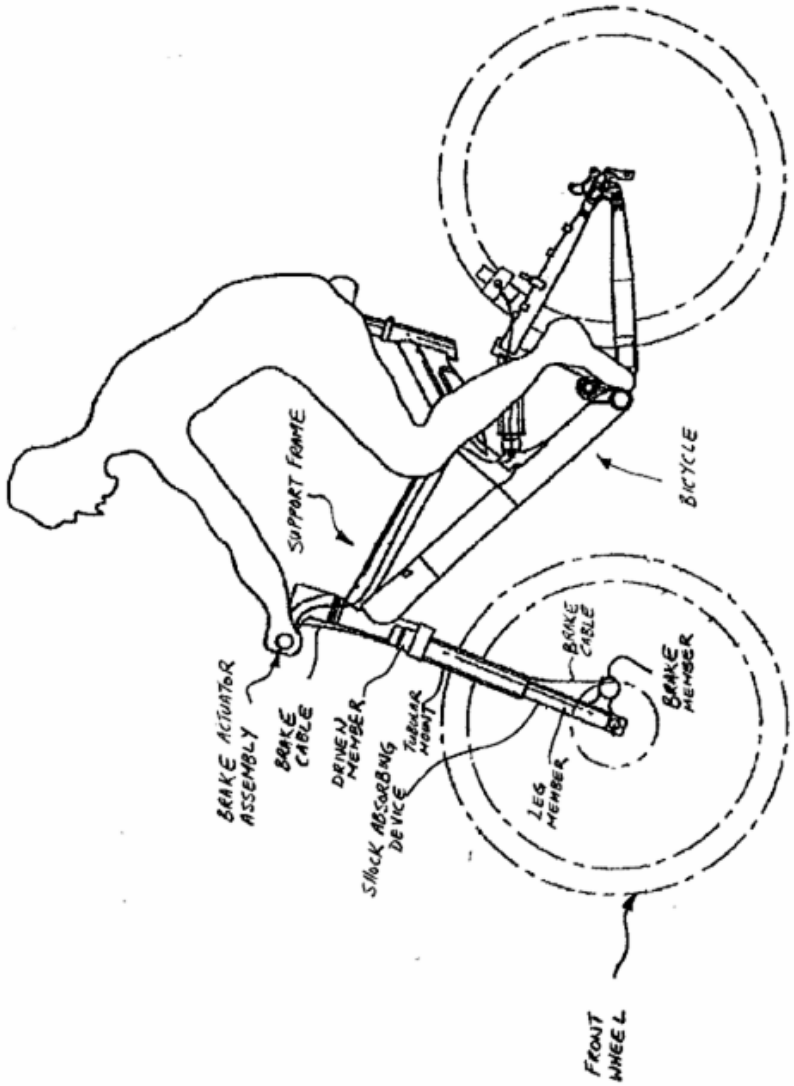

FIG. 1

PAPER A: PREPARATION OF A PATENT SPECIFICATION DRAFTING
22 November 2004, Monday
1400 – 1730 hrs

Maximum Time: 3 Hours + 30 Minutes of reading time **Maximum Marks: 100**

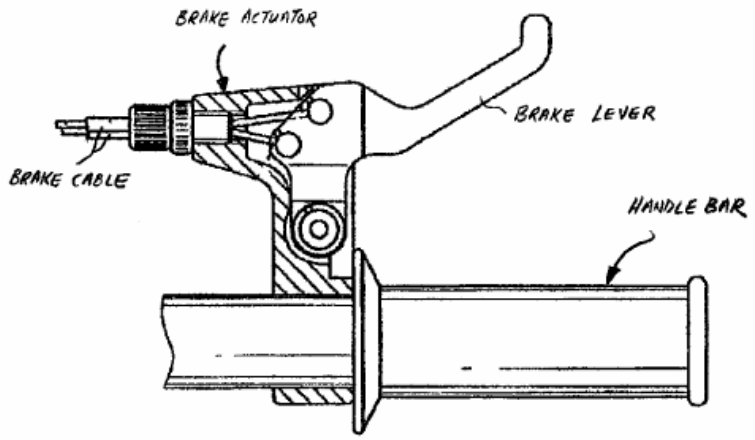

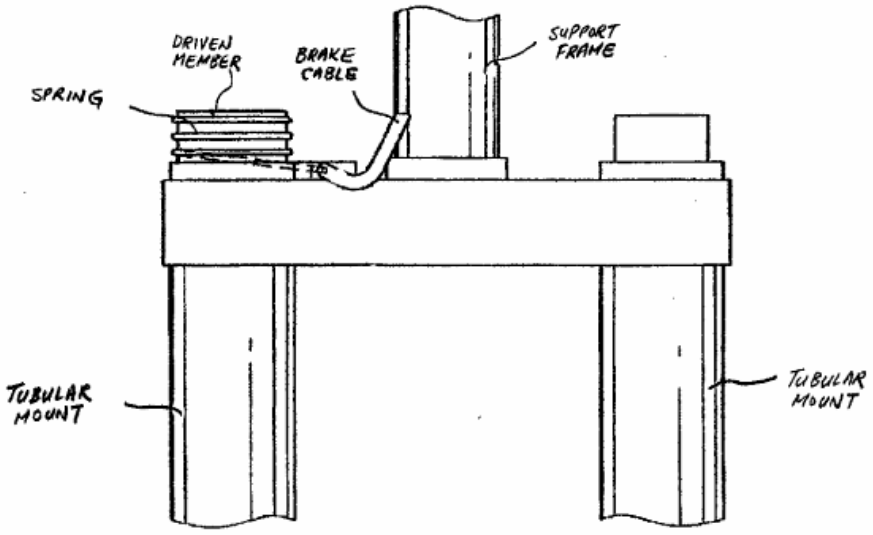

FIG. 2

PAPER A: PREPARATION OF A PATENT SPECIFICATION DRAFTING
22 November 2004, Monday
1400 – 1730 hrs

Maximum Time: 3 Hours + 30 Minutes of reading time **Maximum Marks: 100**

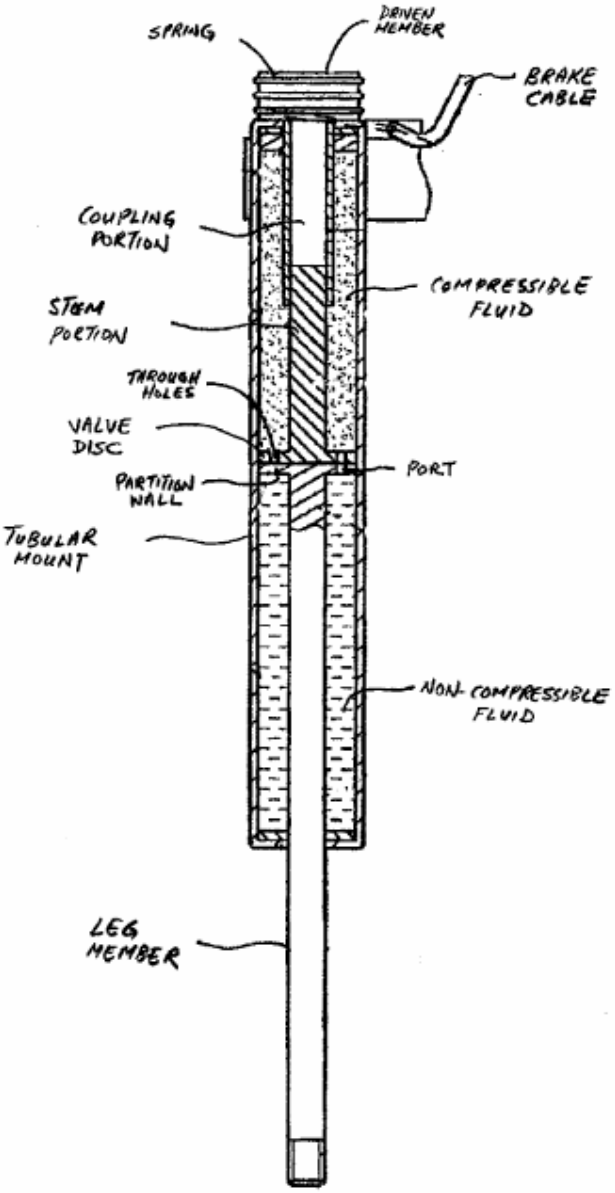

FIG. 3

PAPER A: PREPARATION OF A PATENT SPECIFICATION DRAFTING
22 November 2004, Monday
1400 – 1730 hrs

Maximum Time: 3 Hours + 30 Minutes of reading time **Maximum Marks: 100**

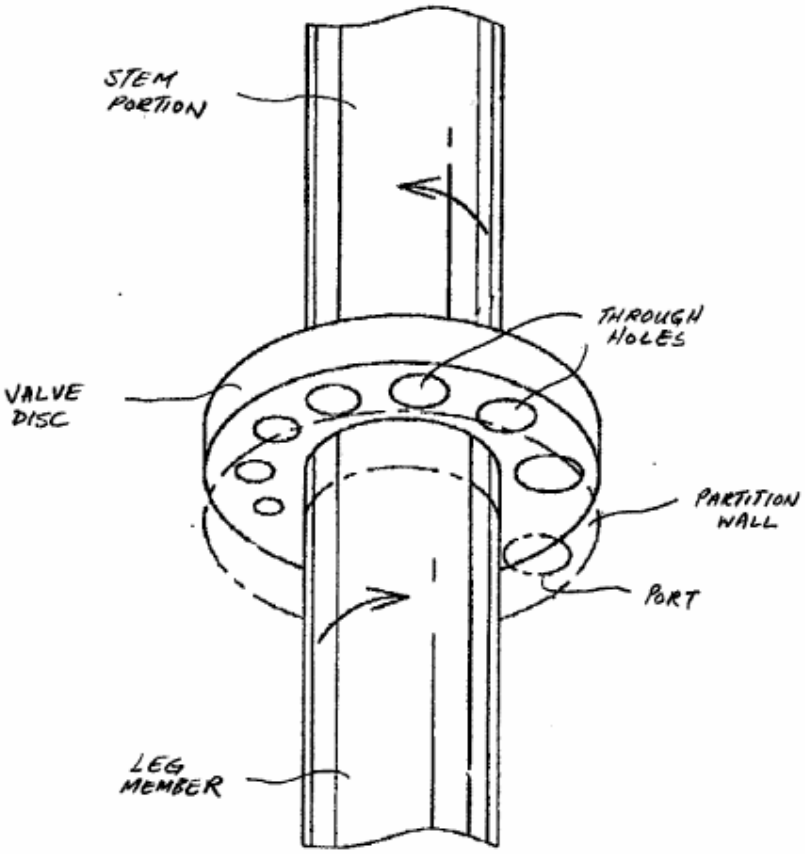

FIG. 4

PAPER A: PREPARATION OF A PATENT SPECIFICATION DRAFTING
22 November 2004, Monday
1400 – 1730 hrs

Maximum Time: 3 Hours + 30 Minutes of reading time **Maximum Marks: 100**

U.S. Patent No. 4,971,344 (EXTRACT)

A resilient suspension system for the front wheel of a bicycle or the like which turns bump energy into viscous heat loss without absorbing the pedaling energy of the rider. The suspension system includes two telescoping tubes 46 having fluid therein and a fluid valve 80 meters the fluid flowing between the two tubes 46 on the compression and expansion of the tubes.

The invention also employs certain design features so as to retain the structural rigidity of the front fork assembly 20 while remaining light in weight and utilizing a majority of the standard bicycle wheel, brake and steering components.

PAPER A: PREPARATION OF A PATENT SPECIFICATION DRAFTING
22 November 2004, Monday
1400 – 1730 hrs

Maximum Time: 3 Hours + 30 Minutes of reading time **Maximum Marks: 100**

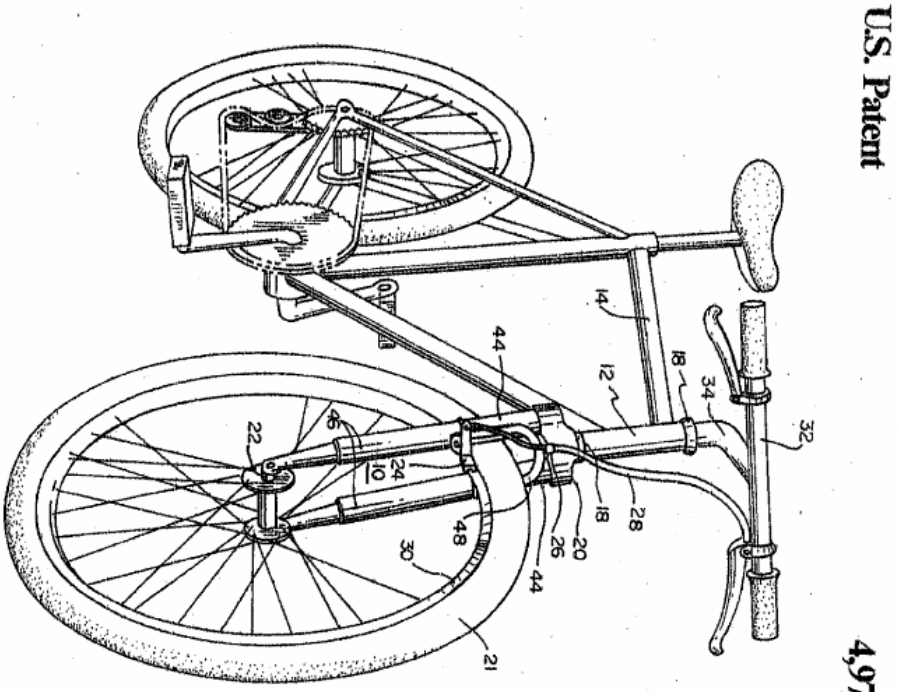

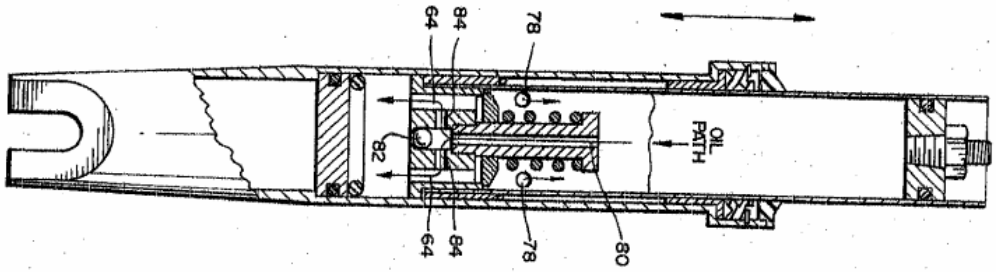

PAPER A: PREPARATION OF A PATENT SPECIFICATION DRAFTING
22 November 2004, Monday
1400 – 1730 hrs

Maximum Time: 3 Hours + 30 Minutes of reading time **Maximum Marks: 100**

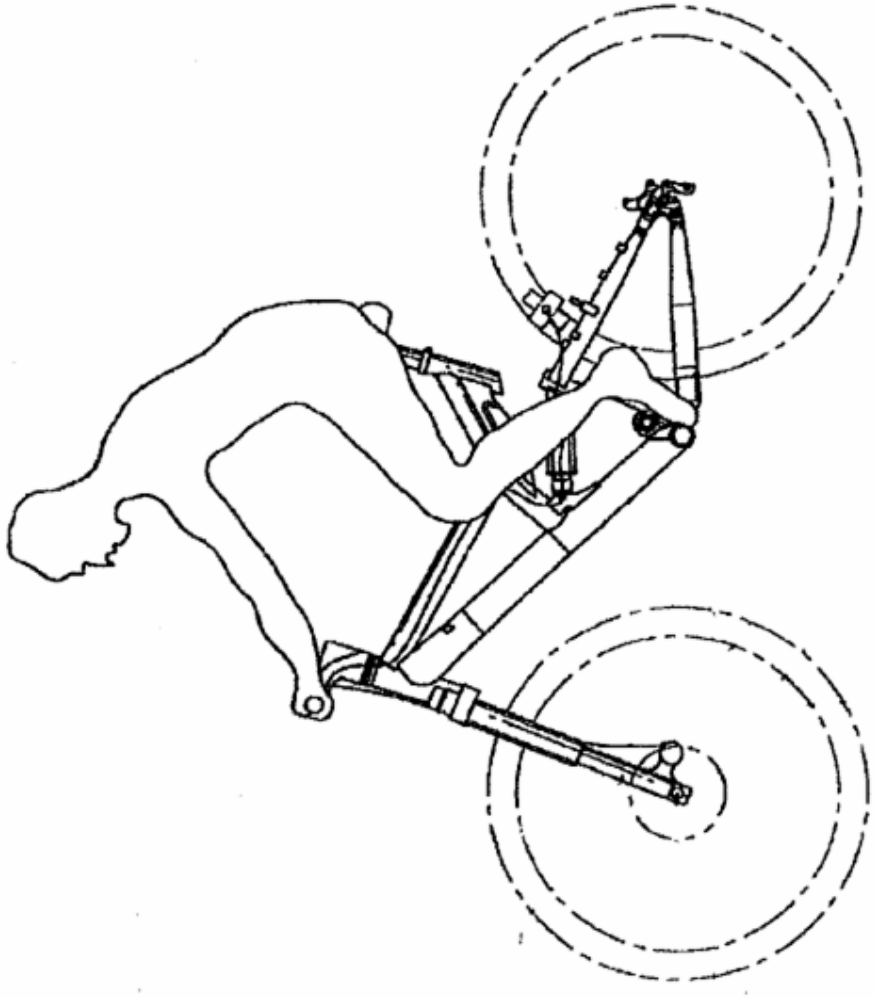

FIG. 1

PAPER A: PREPARATION OF A PATENT SPECIFICATION DRAFTING
22 November 2004, Monday
1400 – 1730 hrs

Maximum Time: 3 Hours + 30 Minutes of reading time **Maximum Marks: 100**

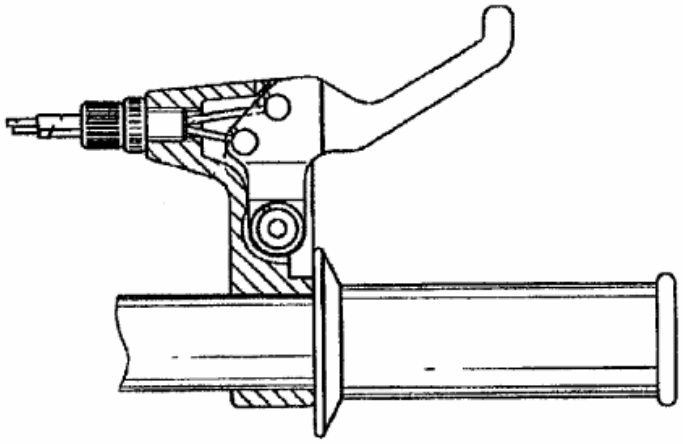

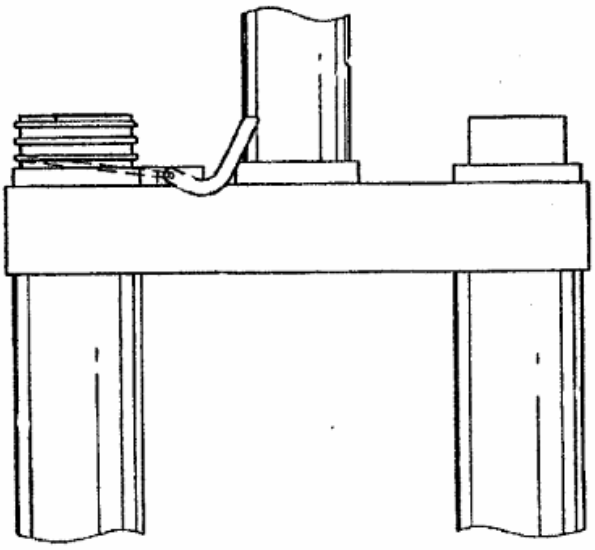

FIG. 2

PAPER A: PREPARATION OF A PATENT SPECIFICATION DRAFTING
22 November 2004, Monday
1400 – 1730 hrs

Maximum Time: 3 Hours + 30 Minutes of reading time **Maximum Marks: 100**

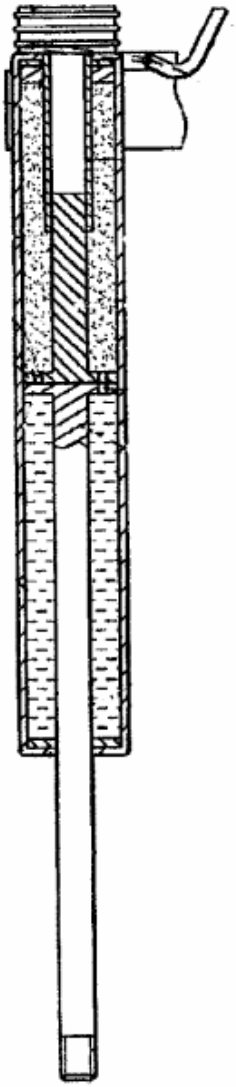

FIG. 3

PAPER A: PREPARATION OF A PATENT SPECIFICATION DRAFTING
22 November 2004, Monday
1400 – 1730 hrs

Maximum Time: 3 Hours + 30 Minutes of reading time **Maximum Marks: 100**

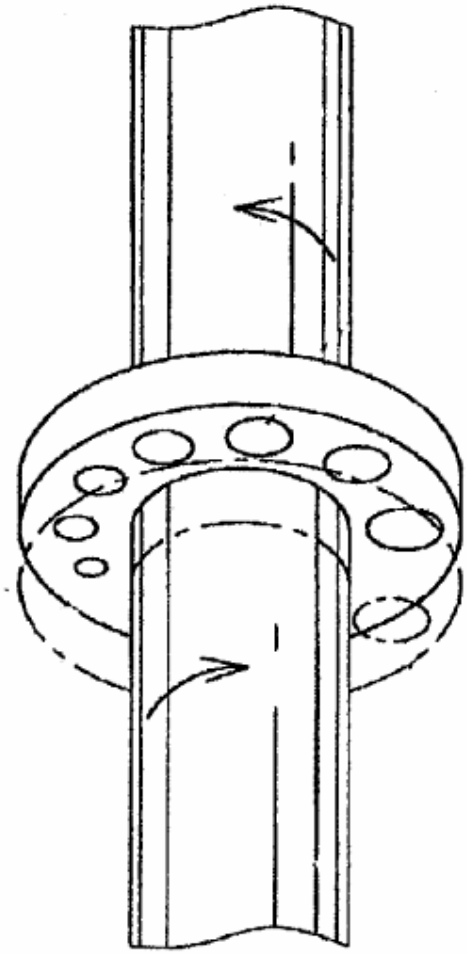

FIG. 4