INTELLECTUAL PROPERTY OFFICE OF SINGAPORE

PATENT AGENTS QUALIFYING EXAMINATION

PAPER B: AMENDMENT OF A PATENT SPECIFICATION
23 November 2004, Tuesday
1400 – 1730 hrs

Maximum Time: 3 Hours + 30 Minutes of reading time **Maximum Marks: 100**

LIGHTING UP YOUR CREATIVITY

INSTRUCTIONS TO CANDIDATES

1. This Paper consists of 22 sheets, including this cover sheet.
2. The documents provided in the question are:

(a) Document A – the question sheet (1 page);

(b) Document B – the specification of the Singapore Patent Application (7 pages of description and 1 page of drawings);

(c) Document C – the Search Report and Written Opinion (2 pages);

(d) Document D – the 1st prior art document (4 pages of description and 2 pages of drawings); and

(e) Document E – the 2nd prior art document (3 pages of description and 1 page of drawings).

3. 30 minutes of reading time is provided. You are not allowed to write in the Answer Booklet(s) during this reading time.
4. Write your answers in English. Answers in any other language will not be marked.
5. Only your answers to the question(s) written or glued in the Answer Booklet(s) provided by the Examination Secretariat will be considered. You are advised to write on one side of each sheet in the Answer Booklet and to commence your answer to each question (where applicable) on a fresh sheet.
6. You should accept the facts given in the Paper and not use any special knowledge you may have. Assume also that the prior art given is exhaustive.
7. For the purpose of this Paper you do not need to propose any amendments to the description of the Patent Application.

   The basis for any amendment proposed to the claims should be indicated where possible. Candidates should provide clear reasoning in support of statements and recommendations made.

PAPER B: AMENDMENT OF A PATENT SPECIFICATION
23 November 2004, Tuesday
1400 – 1730 hrs

Maximum Time: 3 Hours + 30 Minutes of reading time **Maximum Marks: 100**

Document A – Question

Your client approaches you with a problem. He filed a Singapore patent application on 2 July 2004 without priority claim using a specification prepared by a good friend who is a qualified patent agent. He requested search and examination on filing and has received a Search Report and Written Opinion and does not know what to do. He gives you a letter with his comments on the Search Report and Written Opinion.

Client's Letter

Dear Patent Agent,

I attach my specification, the Search Report, the Written Opinion, and the cited prior art.

I'm afraid I do not understand why the objection. The devices in the prior art look quite different to my invention and operate in different way. Theirs are made of metal and mine is made of carbon fibre.

Please can you prepare a draft response to the Written Opinion and send it to me with your comments and recommendations?

In claim 2 and the description there is a typographical error in that 9º should be 90º. Please correct this at the same time.

Yours sincerely,
Client

You check and confirm that Document D was published on 2 July 2002, and that document E is a pending Singapore patent application that was published on 31 July 2004 with a priority date of 31 January 2003.

Prepare a draft response to the Written Opinion, including an analysis of the prior art and amendments. Candidates may find more than one potential amendment each of which may render the claims valid by overcoming the objections in the Written Opinion. Candidates should identify and use the amendment that gives the best protection to the client, but give the client the option of using the alternatives. Also prepare basic advice to your client including your recommendations, and an outline of any options and alternatives available to him. This should include a list in point form of the alternatives available to your client to overcome the lack of unity of invention.

PAPER B: AMENDMENT OF A PATENT SPECIFICATION
23 November 2004, Tuesday
1400 – 1730 hrs

Maximum Time: 3 Hours + 30 Minutes of reading time **Maximum Marks: 100**

Document B – Singapore Patent Application

CAP CUTTER

Technical Field

This invention relates to a cap cutter and refers particularly, though not exclusively, to a cap cutter for cutting through a portion of a metallic foil, or plastics material, cap over the top of a neck of a wine bottle.

Background

The removal of metallic foil or plastics material cap from the top of a wine bottle is necessary to enable access to the cork. Removal of the cork is necessary for the wine to be dispensed. Removal of the cap can be achieved using a knife, but this requires skill. Plus there is always the risk of a cut to a finger or hand. Also, it can damage the edge of the blade of the knife.

Corks have been pulled through the cap by rupturing the cap. But the cap is still in place and must be removed by hand. This leaves an undesirably rough edge, and metallic foil can cause cuts to fingers.

Summary

In accordance with a first preferred aspect there is provided a cap cutter comprising: a first portion having a first recess and at least one first cutting wheel adjacent the first recess and extending over the first recess; and a second portion having a second recess and at least one second cutting wheel adjacent the second recess and extending over the second recess. The first portion and the second portion are relatively moveable for enabling the at least one first cutting wheel and the at least one second cutting wheel to be brought into contact with and for cutting a cap of a wine bottle.

There may be two first cutting wheels spaced apart by 9º and two second cutting wheels spaced apart by 90º.

The first recess may be a first segment of a circle, and the second recess may be a second segment of the circle; the first segment being greater that the second segment.

In accordance with a second preferred aspect, there is provided apparatus for removing a cork from a wine bottle, the apparatus comprising: a body; a lever pivotally attached to the body at a first end thereof; a cap cutter at a second end of the body, the second end being remote from the first end; and a corkscrew pivotally attached to the body intermediate the first and second ends. The cap cutter has a first portion having a first recess and at least one first cutting wheel adjacent the first recess and extending over the first recess. The at least one first cutting wheel is able to be brought into contact with and cut a cap of a wine bottle.

The apparatus may further comprise a second portion of the cap cutter, the second portion having a second recess and at least one second cutting wheel adjacent the second recess and extending over the second recess.

The first portion and the second portion may be relatively moveable for enabling the at least one first cutting wheel and the at least one second cutting wheel to be brought into contact with and for cutting a cap of a wine bottle.

For both aspects, the first portion may have two spaced apart and generally parallel bores for slideably receiving therein legs of the second portion. Each of the bores has a step therein, and each of the legs may have an enlarged end to prevent the second portion from becoming detached from the first portion.

Brief Description of the Drawings

In order that the present invention may be fully understood and readily put into practical effect, there shall now be described by way of non-limitative example only preferred embodiments of the present invention, the description being with reference to the accompanying illustrative drawings in which:

Figure 1 is a side view of the preferred embodiment;

Figure 2 is an enlarged side view of the cutter portion of the embodiment of Figure 1 in a first position;

Figure 3 is a view corresponding to Figure 2 but in a second position; and

Figure 4 is a vertical cross sectional view of the cutter portion of Figure 2 and 3 in use to remove a top of a cap of a wine bottle.

Detailed Description of Preferred Embodiment

To first refer to Figure 1, there is shown a corkscrew of the lever action type. Such corkscrews are well known and generally comprise a body 10 having a corkscrew 12 pivotally attached thereto intermediate the two ends 24, 26 of body 10. At or adjacent one end 24 is a lever 16 also pivotally attached to body 10. The lever has a notch 18 for engaging the top of the neck of a bottle after corkscrew 12 has been inserted into the cork. By virtue of the spaced-apart relationship of lever 16 and corkscrew 12, and using body 10, the cork can be removed using a lifting lever action. The body 10 pivots around lever pivot 20 to obtain the mechanical advantage, and corkscrew 12 pivots about its pivot point 22 to keep the movement of the cork along its longitudinal axis, thus preventing cork breakage.

A recess 8 is provided in body 10 to accommodate corkscrew 12 when corkscrew 12 is not in use. Lever 16 can also be pivoted to be over corkscrew 12 when not in use so that the body 10, corkscrew 12 and lever 16 present a compact unit when not in use.

At the second end 26 is a cap cutter 28. The cap cutter 28 may be a separate device releasably attached to body 10, or may be at least in part integral with body 10.

To now refer to Figures 2 and 3, the cap cutter 28 comprises a “stationary” portion 30 and a moveable portion 32 able to be moved laterally relative to stationary portion 30. The stationary portion 30 may be integral with or releasably attached to body 10.

The stationary portion 30 has an integral heel 34 extending laterally away from the moveable portion 32. The heel 34 forms an end for recess 8 to protect users from injury from the pointed end 37 of corkscrew 12 when in recess 8.

The stationary portion 30 has an arcuate recess 36 at the side 38 adjacent movable portion 32. The recess 36 is formed as a segment of a circle, the radius of which is no smaller that the radius of a cap when fitted on the smallest diameter neck of a wine bottle and no larger that the radius of a cap when fitted to the largest diameter neck of a wine bottle.

Mounted on the same side of stationary portion 30 as the recess 36 and immediately adjacent recess 36 are two spaced-apart cutting wheels 40.

It is preferred for the cutting wheels 40 to be equally spaced, such as being spaced apart by 9º as illustrated to assist in uniform cutting so that the rotational movement to effect complete circumferential cap is minimized. There may be any suitable number of cutting wheels including, one, two, three or four. There is no need for more than four.

The stationary portion 30 has two spaced apart and generally parallel bores 42 therethrough or therein each of which is to accommodate a leg 44 of the moveable portion 32 in the manner of a sliding fit.

Preferably bores 42 are stepped at 46 so that the enlarged end 48 of legs 44 contacts the step 46 to prevent further axial movement. The legs 44 preferably extend from the ends of moveable portion 32.

Moveable portion 32 also has a recess 50 with two cutting wheels 52. The recess 50 is preferably of the same depth as recess 36 and is also a segment of a circle of the same radius as recess 36.

When legs 44 are at their maximum extension from stationary portion, recesses 36, 50 form two segments of the same circle, with segment of recess 36 being greater than segment of recess 50. In this way, different neck diameters can more readily be accommodated not only by the slideable nature of moveable portion 32 relative to the stationary portion, but also due to the different circle segments of recesses 36, 50.

The moveable portion 32 has a first or rest position where it is against stationary portion 30 (Figure 2), and a second or use position where legs 44 are extended (Figure 3).

To now refer to Figure 4, cutting wheels 40, 52 are each mounted on a spindle 54 located in an opening 56 of the portions 30, 32 respectively to enable rotation of cutting wheels 40, 52. This may be by cutting wheels 40, 52 being rotatably mounted on spindle 54 or, as shown, the cutting wheels 40,52 being integral with spindle 54 and the spindle 54 be rotatably mounted in portions 30, 32. Each spindle may have a flattened end 58 to retain the spindle 54 in axial position relative to the portions 30, 32.

As shown in Figure 4, the moveable portion 32 is moved to the second or use position; recesses 38, 50 placed on top of the cap 60 of the neck 62 of the bottle 64. The moveable portion 32 is then moved inwardly until cutting wheels 52 contact cap 60. Using finger pressure, the cap cutter 28 is rotated to cause the cutting wheels 40, 52 to cut the cap 60. As the cutting wheels 40, 52 are all 90º apart, the rotation of the foil cutter 28 does not need to be much more that 90º to cause effective cutting of cap 60. The foil cutter 28 can then be removed, as can be the top portion 66 of cap 60. Corkscrew 12 can then be used to remove cork 68.

The foil cutter 28 may be integral with the corkscrew, or may be a separate unit. If a separate unit, it may be releasably attached to the body 10.

Whilst there has been described in the foregoing description a preferred embodiment of the present invention, it will be understood by those skilled in the technology that many variations or modifications in details of design, construction, or operation may be made without departing from the present invention as defined in the claims.

PAPER B: AMENDMENT OF A PATENT SPECIFICATION
23 November 2004, Tuesday
1400 – 1730 hrs

Maximum Time: 3 Hours + 30 Minutes of reading time **Maximum Marks: 100**

The Claims

1. A cap cutter comprising:

   (a) a first portion having a first recess and at least one first cutting wheel adjacent the first recess and extending over the first recess;

   (b) a second portion having a second recess and at least one second cutting wheel adjacent the second recess and extending over the second recess;

   (c) the first portion and the second portion being relatively moveable for enabling the at least one first cutting wheel and the least one second cutting wheel to be brought into contact with and being for cutting a cap of a wine bottle.

2. A cap cutter as claimed in claim 1, wherein there are two first cutting wheels spaced apart by 9º, and two second cutting wheels spaced apart by 90º.

3. A cap cutter as claimed in claim 1 or claim 2, wherein the first portion has two spaced apart and generally parallel bores for slideably receiving therein legs of the second portion.

4. A cap cutter as claimed in claim 3, wherein each of the bores has a step therein, and each of the legs has an enlarged end to prevent the second portion from becoming detached from the first portion.

5. A cap cutter as claimed in any one of claims 1 to 4, wherein the first recess is a first segment of a circle, and the second recess is a second segment of the circle; the first segment being greater than the second segment.

6. Apparatus for removing a cork from a wine bottle, the apparatus comprising:

   (a) a body;

   (b) a lever pivotally attached to the body at a first end thereof;

   (c) a cap cutter at a second end of the body, the second end being remote from the first end; and

   (d) a corkscrew pivotally attached to the body intermediate the first and second ends;

   (e) the cap cutter comprising a first portion having a first recess and at least one first cutting wheel adjacent the first recess and extending over the first recess;

   (f) the at least one first cutting wheel being able to be brought into contact with and being for cutting a cap of a wine bottle.

7. Apparatus as claimed in claim 6, the cap cutter further comprising:

   (a) a second portion having a second recess and at least one second cutting wheel adjacent the second recess and extending over the second recess; wherein

   (b) the first portion and the second portion are relatively moveable for enabling the at least one first cutting wheel and the least one second cutting wheel to be brought into contact with and being for cutting a cap of a wine bottle;

   and wherein

   (c) the first portion has two spaced apart and generally parallel bores for slideably receiving therein legs of the second portion.

8. Apparatus as claimed in claim 7, wherein each of the bores has a step therein, and end of the legs has an enlarged end to prevent the second portion from becoming detached from the first portion.

PAPER B: AMENDMENT OF A PATENT SPECIFICATION
23 November 2004, Tuesday
1400 – 1730 hrs

Maximum Time: 3 Hours + 30 Minutes of reading time **Maximum Marks: 100**

Singapore Patent Application

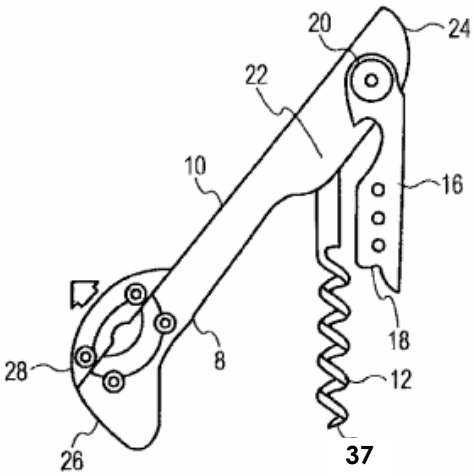

FIG. 1

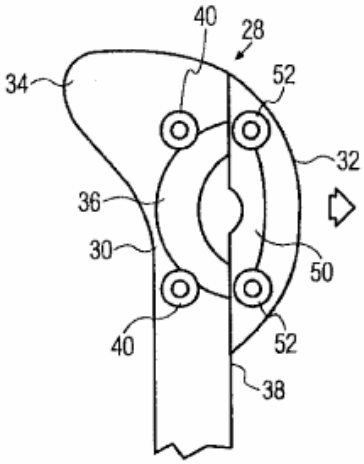

FIG. 2

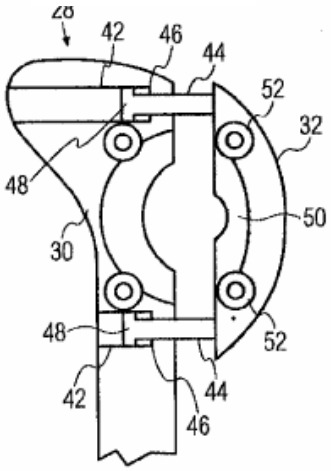

FIG. 3

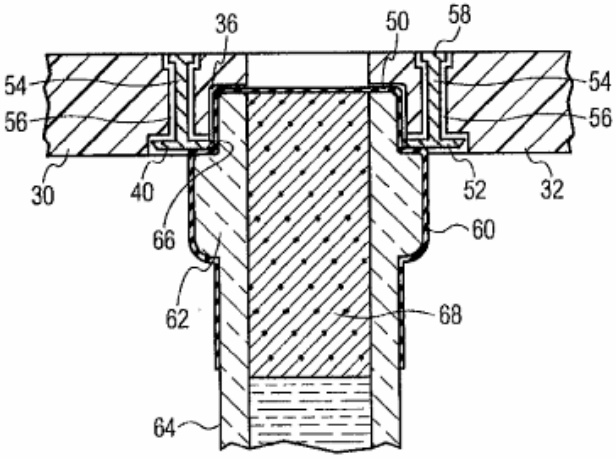

FIG. 4

PAPER B: AMENDMENT OF A PATENT SPECIFICATION
23 November 2004, Tuesday
1400 – 1730 hrs

Maximum Time: 3 Hours + 30 Minutes of reading time **Maximum Marks: 100**

Document C – Search Report and Written Opinion

Search Report

Category	Document	Relevant to Claims Number
X	Document D	1 to 5
X, P	Document E	6
Y	Document D and E	7 and 8

"X" Document of particular relevance; the claimed invention cannot be considered novel or cannot be considered to involve an inventive step when the document is taken alone.

"Y" Document of particular relevance; the claimed invention cannot be considered to involve an inventive step when the document is combined with one or more other such documents, the combination being obvious to a person skilled in the art.

"P" An earlier application for patent but published on or after the priority date.

There is a lack of unity of invention as claims 1 to 5 are directed to a cap, whereas claims 6 to 8 are directed to an apparatus for removing a cork. There is no special technical feature that is common to claims 1 and 6. However, all claims have been able to be searched in the one search.

PAPER B: AMENDMENT OF A PATENT SPECIFICATION
23 November 2004, Tuesday
1400 – 1730 hrs

Maximum Time: 3 Hours + 30 Minutes of reading time **Maximum Marks: 100**

Written Opinion

Novelty

Yes Claims 7 and 8

No Claims 1 to 6

Inventive Step

Yes

No Claims 1 to 8

Industrial Applicability

Yes Claims 1 to 8

No

Comments

Claims 1 to 5 are not novel and have no inventive step in view of Document D.

Claim 6 is not novel in view of Document E. Claims 6 to 8 do not possess an inventive step in view of the combination of Documents D and E, Document E referring to Document D.

Unity of invention is lacking as claims 6 to 8 are directed to an apparatus whereas claims 1 to 5 are directed to a cap cutter.

PAPER B: AMENDMENT OF A PATENT SPECIFICATION
23 November 2004, Tuesday
1400 – 1730 hrs

Maximum Time: 3 Hours + 30 Minutes of reading time **Maximum Marks: 100**

Document D – 1st Prior Art

FOIL CUTTER

The present invention relates generally to a cutting device for removing a portion of the metallic foil or plastic material covering the upper portion of a wine bottle neck prior to removal of the cork from the neck of the bottle.

In the drawings:

Fig. 1 is a bottom view of a first embodiment of the invention:

Fig. 2 is a transverse cross-sectional view taken on the line 2-2 of Fig. 1;

Fig. 3 is an enlarged detailed sectional view taken on the line 3-3 of Fig. 1;

Fig. 4 is a bottom plan view of a second embodiment of the invention: and

Fig. 5 is detailed elevation view of a portion of the device of Fig. 4 when viewed from a position which is at the extreme right of Fig. 4.

Figs.1-3 illustrate a first embodiment of the invention, and show a device including a monolithic frame, molded of a suitable thermoplastic resin. The frame has opposed force application members 30 joined by a resiliently flexible connection 32. Connection 32 is generally U-shaped, and the body 30, 32 as a whole is likewise generally U-shaped, members 30 forming continuations of the arms of the U-shaped connection 32.

The free ends of the members 30 are opposed to each other, facing inwardly, and adapted for disposition on opposite sides of a wine bottle neck 18 as shown in Fig. 2. Connection 32 positions members 30 in an unflexed position, but allows them to be urged inwardly to engage the bottle neck 18.

Each of the free ends of the force application members 30 has a skirt 36, a flange or lip 35 extending inwardly from the upper extremity of the skirt 36, and a pair of thickened hub-like formations 37 extending downwardly from the underside of the lip 35 and circumferentially spaced with respect to the axis A of the device. The skirts 36 and lips 35 form a recess 31 in which the top of the bottle neck 18 can be accommodated.

On each of the formations 37, there is mounted a rollertype cutter 38. More specifically, as best shown in Fig. 3, each rollertype cutter 38 has a central, longitudinal bore 40 which receives a shaft 42 on which the rollertype cutter 38 is freely rotatable. The lower end of bore 40 is counterbored at 44, and a flange 46, extending radially outwardly from the lower end of shaft 42 is disposed in counterbore 44 to support rollertype cutter 38 on shaft 42. The upper end of shaft 42 is fixedly mounted in formation 37 in any suitable manner. The rollertype cutters 38 are sized to protrude radially inwardly beyond formations 37 for cutting engagement with the foil covering of bottle neck 18, the protrusion being the same or slightly greater than the thickness of the foil covering.

Lips 35 abut the top of the bottle neck 18 to aid the user in properly positioning the rollertype cutters 38 along the length of the bottle neck, and more specifically, a short distance below the top just above the drip ring 18a.

The members 30 position the rollertype cutters 38 such that they are radially spaced from the axis A, aligned transversely of the axis A (see Fig. 2), and circumferentially spread with the angular displacement between each rollertype cutter 38 and the two adjacent rollertype cutters 38 being less than 180º. More specifically, in this case, there are four rollertype cutters 38 generally circumferentially spaced at about 90º.

Upon rotation of the frame about axis A about 90º, the rollertype cutters 38 respectively define contiguous arcs of a common circle. In practical application, this means that the rollertype cutters 38 are sufficiently aligned so that the cuts they make in the foil intersect to form a full circle.

Due to the rolling action of the rollertype cutters 38, they need not be extremely sharp in order to perform satisfactorily. On the contrary, the edge 38a of each roller may be somewhat dull or blunted.

The connection 32 is resiliently flexible. This flexibility allows the rollertype cutters 38 to define circles of different diameters, and thus, to be used on different size bottles. Connection 32 normally assumes an unflexed position in which the two force application members 30 are spaced from each other. Furthermore, the size and relative dispositions of the various parts of the device are chosen so that, in this unflexed position, the flanges 35

are spaced apart by a distance greater than that required for engagement of the rollertype cutters 38 with a bottle neck 18 of standard size just above the drip ring 18a (see Fig. 2).

In preferred embodiments of the present invention, when the connection 32 is in its unflexed position, as shown Fig. 1, the radial distance between the axis A and each of the rollertype cutters 38 is approximately 0.6 inch. With this spacing, when the connection 32 is in its unflexed position, the rollertype cutters 38 will clear the neck of a "standard" size bottle 18 above its drip ring 18a so that the device can easily be lowered over the top of the bottle with the rollertype cutters 38 generally surrounding the bottle neck 18.

The device need not be actively opened to position it with respect to the bottle neck 18, nor need it be forcibly snapped over the bottle neck. Once properly positioned, the resilience of connection 32 allows the flanges 35 to be urged toward each other by applying forces in a radially inward direction to members 30 to engage rollertype cutters 38 with the bottle neck.

Of course, the same will be true in the case for smaller size bottles, such as half bottles, except that the force application members 30 will be flexed inwardly somewhat more in order to bring the rollertype cutters 38 into engagement with the bottle neck 18. The preferred sizing specified above will further permit the device to slip fairly easily over the top of most larger size bottles. The flexibility of connection 32 will allow any slight spreading necessary, and the configuration of the device eliminates any need for the user to actively spread the force application members 30 apart manually.

The connection 32 extends generally laterally from the force application members 30 in use, maximizing the comfort of the user's hand. To make the connection 32 fit even more comfortably in the user's palm, its arms 32b are tapered inwardly somewhat toward its base 32a, and the base in turn is rounded or radiused, as shown in Fig. 1. Also as best shown in Fig. 3, outer corners 50 and 52 are radiused for the comfort of the user. Although unlikely to be engaged by the user, inner corners 54 and 56 are likewise radiused.

Figs. 4 and 5 show a second embodiment of the invention which is quite similar to that of Figs. 1 – 3 except that the plastic body is formed in two parts 60 and 62. Part 60 includes one of the force application members 64, one arm 66 of the connection 32, and a portion 68 of the base of the connection 32. The other part 62 includes the other force application

member 64', which is substantially identical to member 64, the other arm 66' of the connection 32, and another portion 70 of the base of the connection 32.

The two portions 68 and 70 of the base of the connection 32 are pivotally connected to each other. More specifically, portion 68 forms a clevis 72, and portion 70 forms a tongue 74 received in clevis 72 as shown in Fig. 5. The tongue 74 and clevis 72 are connected by a pivot pin 76, secured in the apparatus in any suitable manner as well known in the art. To bias the arms 66 and 66' away from each other, and thus hold the members 64 and 64' in an open position, a compression spring 78 is provided on the inner side of the two portions 68 and 70 of the base, the ends of the spring being received in respective recesses in the two parts 60 and 62. The force application members 64 and 64', including their rollers 80, are similar in form and function to member 30 and rollertype cutters 38 of the preceding embodiment.

.

PAPER B: AMENDMENT OF A PATENT SPECIFICATION
23 November 2004, Tuesday
1400 – 1730 hrs

Maximum Time: 3 Hours + 30 Minutes of reading time **Maximum Marks: 100**

1st Prior Art

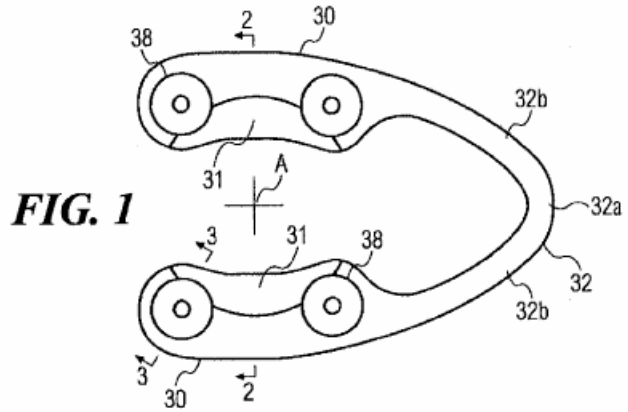

FIG. 1

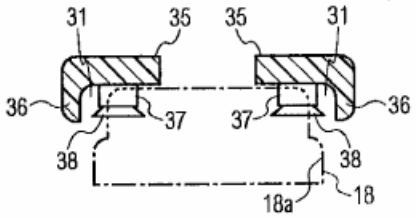

FIG. 2

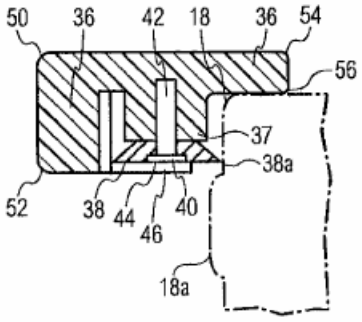

FIG. 3

PAPER B: AMENDMENT OF A PATENT SPECIFICATION
23 November 2004, Tuesday
1400 – 1730 hrs

Maximum Time: 3 Hours + 30 Minutes of reading time **Maximum Marks: 100**

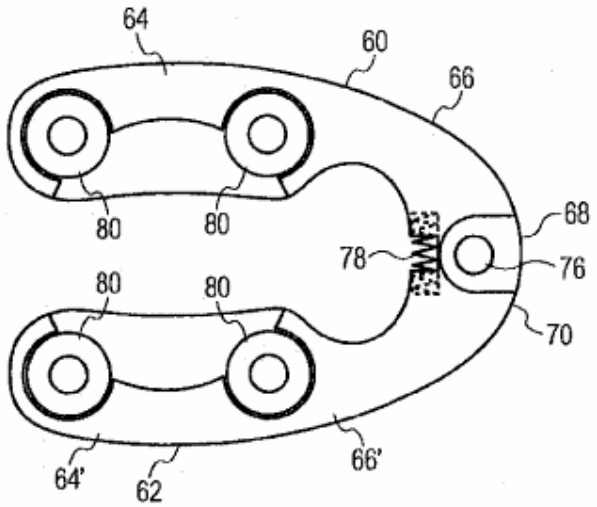

FIG. 4

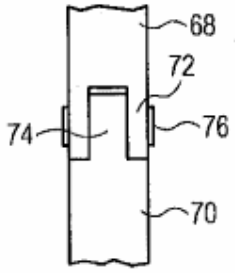

FIG. 5

PAPER B: AMENDMENT OF A PATENT SPECIFICATION
23 November 2004, Tuesday
1400 – 1730 hrs

Maximum Time: 3 Hours + 30 Minutes of reading time **Maximum Marks: 100**

Document E – 2nd Prior Art

CORKSCEW WITH FITTING TO SHEAR THE TINFOIL, PLASTIC OR OTHER CAPS ON THE NECK OF BOTTLES

This invention concerns a corkscrew with a fitting to shear the tinfoil, plastic or other caps on the neck of bottles.

The attached figures are given as a non-restrictive example and show some preferred embodiments of the invention as follows:

Fig. 1 shows a known type of corkscrew provided with a first form of embodiment of the shearing fitting accordingly to the invention;

Fig. 2 gives an enlarged scale side view according to the arrow A of the shearing fitting of Fig. 1 accordingly to the invention; and

Fig. 3 shows a cross-section of the corkscrew of Fig. 2 in cooperation with the neck of a bottle during the step of shearing the tinfoil cap.

The reference number 10 in the Fig. 1 indicates generally a corkscrew according to the invention, in which a shearing fitting 16 is an integral part of a grip 11.

In this case the corkscrew 10 is a type which can be kept in the pocket, can draw corks 27 and consists of a grip 11, on which are pivoted a drawing screw 12 to be screwed into a cork 27 and a short element 13, which is supported on the top of a bottle 14 and makes possible the leverage action for drawing the cork 27.

The fitting 16 to shear a cap 17 surrounding the neck 18 of the bottle 14 is positioned on the end of portion of the grip 11.

The shearing fitting 16 according to the invention comprises at least one small shearing wheel 22 having advantageously its edge bevelled with a bevel 26 facing the body of the bottle.

The bevel 26, besides having to shear the cap 17, has the task of making the upper edge 17a of the lower part of the cap 17 adhere to the glass of the bottle 14 after the shearing has taken place.

In this way any seepage of liquid between the cap 17 and the neck 18 of the bottle 14 and any risk of being cut by the remaining part of the cap 17 are avoided.

In the form of embodiment shown in Figs. 1 to 3, the shearing fitting 16 is characterised by a recess 19 conformed as an arc of a circle and machined in the end part of the grip 11; the recess 19 acts as a guide and support on the top 15 of the neck 18 of the bottle 14.

As shown in Fig. 2, an inner end 20 of the recess 19 lies substantially parallel to the plane on which the grip 11 lies, and protrudes advantageously from the grip 11 to increase the support surface against the top 15 of the neck 18 of the bottle 14.

In this case two flat circular seatings 21 are machined on the outer edge of the recess 19 in substantially opposed positions; in the these seatings 21 are installed a small shearing wheel 22 and a small guide wheel 23 respectively, the seatings being referenced with 21a and 21b respectively.

The small guide wheels 23 may have a cylindrical outer edge or may include a bevel facing the top of the bottle.

The shearing 22 and guide 23 wheels are secured with rivets 24, or another system suitable for the purpose, to the grip 22 so that each of them can rotate freely on its own stationary axis 25.

The shearing and guide wheels 22-23 are applied in such a way that they protrude partly into the recess 19.

According to a variant the guide wheel 23 is like the shearing wheel 22 and also has the task of shearing the cap 17.

Fig. 3 shows the shearing fitting 16 of Fig. 1 applied at least partly to the neck 18 of the bottle 14 during the step of shearing the cap 17.

The shearing of the tinfoil cap 17 is effected by positioning the top 15 of the neck 18 of the bottle 14 against the inner end 20 of the recess 19, and by acting with rotation and pressure on the grip 11 of the corkscrew 10 and/or on the bottle 14. The shearing wheel 22 cuts the upper part of the cap 17 along the shearing line. This circumferential cut enables the cork 27 of the bottle 14 to be freed of obstruction by the cap 17 when the upper part of the cap 17 has been removed. In this way the cap 17 can be removed without needing a separate foil cutter as disclosed in the specification of Document D.

PAPER B: AMENDMENT OF A PATENT SPECIFICATION
23 November 2004, Tuesday
1400 – 1730 hrs

Maximum Time: 3 Hours + 30 Minutes of reading time **Maximum Marks: 100**

2nd Prior Art

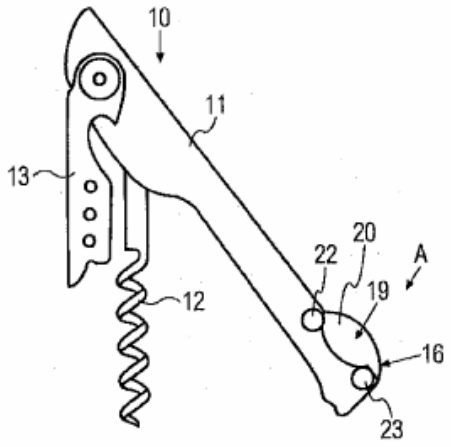

FIG. 1

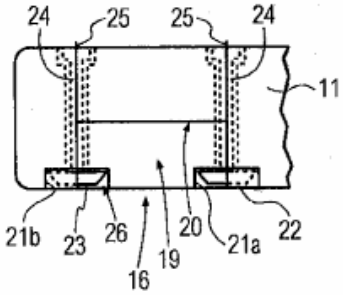

FIG. 2

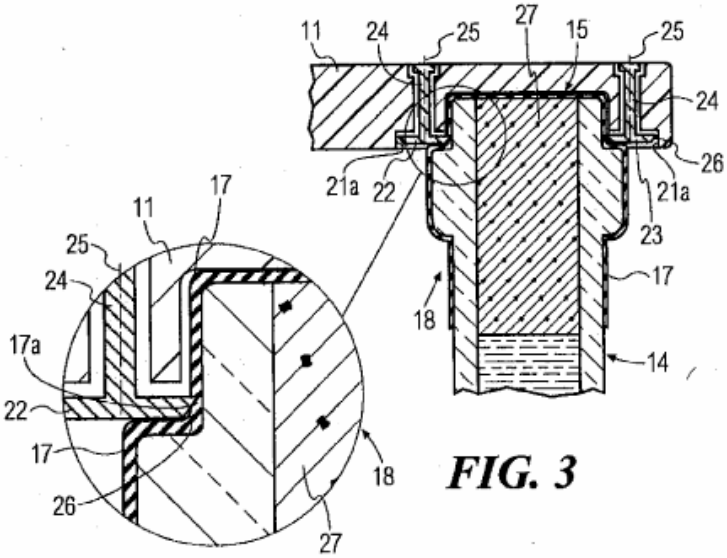

FIG. 3