INTELLECTUAL PROPERTY OFFICE OF SINGAPORE

PATENT AGENTS QUALIFYING EXAMINATION

PAPER A: PREPARATION OF A PATENT SPECIFICATION
24 November 2003, Monday
1400 – 1700 hrs

Maximum Time: 3 Hours + 15 Minutes of reading time **Maximum Marks: 100 Points**

LIGHTING UP YOUR CREATIVITY

INSTRUCTION TO CANDIDATES

1. This Paper consists of 10 sheets, including this cover sheet.

2. 15 minutes of reading time is provided. You are advised to spend this time reading the instructions and the question(s) before you attempt to answer the question(s).

3. Write your answers in English. Answers in any other language will not be marked.

4. Only your answers to the question(s) written or pasted in the Answer Booklet (that is provided by the Examination Secretariat) would be considered. You are advised to write on one side of each sheet in the Answer Booklet and to commence your answer to each question (where applicable) on a fresh sheet.

5. Write on one side of the paper only.

6. You should accept the facts given in the paper and not use any special knowledge you may have. Assume also that the prior art given is exhaustive.

PAPER A: PREPARATION OF A PATENT SPECIFICATION
24 November 2003, Monday
1400 – 1700 hrs

Maximum Time: 3 Hours + 15 Minutes of reading time **Maximum Marks: 100 Points**

CLIENT'S LETTER

Mr. Patent Professional
City Patent Firm
Big City, State

Re: **Possible Patent Application For Investee Company's Soy Bean Making Appliance**

Dear Madam/Sir,

We are pleased to inform you that our venture capital fund has commenced investing in our first food processing startup company.

You may notice that our fund has focused on household appliances as a growth area for the next five years. In particular, we are keen to invest in startup companies who cater for the healthy lifestyle.

Our first investee company plans to launch a new line of appliance that is particularly suited for producing soy bean milk. Related end products that come to mind are almond, sesame, or peanuts or similar bean puree.

Just imagine that in the comfort of your own home that you can make your own soy bean milk, almond puree or peanut butter! No more queuing up at stuffy market stalls or expensive restaurants before you can enjoy your own choice bean drink and knowing fully that your beans are organically grown.

We think this line of soy bean making appliance will take the market by storm because existing table top mixers and blenders do not meet the public's expectations. The key to our investee company's appliance product is its versatile stirring mechanism and the feature that allows heating and processing of food to be done safely and conveniently.

Food processors such as table top mixers and blenders feature a housing, a stirring shaft and a mixing bowl. Most housings include a head, a stem and a base. The stirring shaft or mechanism can be categorized into two groups: (1) top mounted and (2) bottom mounted. The top mounted mixers are exemplified by Figure 1; the bottom mounted mixers is typified by Figure 2 on attached sheets.

With respect to top mounted mixers, the motor and coupling mechanism reside within the head. The head may be rotatable (as shown in Figure 1) or non-rotatable (industrial strength and not shown in figures). One or two stirring shafts are manually attached to the coupling mechanism before they are lowered into the mixing bowl.

The problem with top mounted mixers is their relatively large clearance between the head and the mixing bowl. Besides, the mixing bowl cannot be covered in order not to obstruct the stirring shafts. Such mixers are limited to operate at relatively slow speed to avoid spillage from the mixing bowl. However, top mounted mixer has an edge over bottom mounted mixers: ability to integrate a heating plate at the base.

While the top mounted mixers are limited by stirring speed on safety concerns, the bottom mounted mixers are not. The motor is disposed in the base of the bottom mounted mixers and coupled to the stirring shaft (and blade) through a coupling mechanism in lower portion of the mixing bowl, thus allowing it to operate at high speed. Typically, the mixing bowl is capped with a lid. The major disadvantage of bottom mounted mixers is the difficulty in heating the contents of the mixing bowl. It is theoretically possible to extend a heating element through the top of the mixing bowl, but in practice, it is hazardous and inconvenient.

In contrast, our investee food processing startup company's appliance overcomes the disadvantages of both the top mounted and bottom mounted mixers. The accompanying technical drawings of the prototype appliance in Figures 3 – 4 show in greater details the breakthrough.

PAPER A: PREPARATION OF A PATENT SPECIFICATION
24 November 2003, Monday
1400 – 1700 hrs

Maximum Time: 3 Hours + 15 Minutes of reading time **Maximum Marks: 100 Points**

The new food processing appliance features a detachable stirring shaft as part of a mixing jug and a motor assembly that incorporates a cam and gear mechanism for engaging the stirring shaft when in use and releasing the same when not in use.

The mixing jug has an interesting sieve retainer as shown in greater details in Figure 4 for not only positioning the detachable stirring shaft for engagement with the cam and gear assembly but also receiving soy bean for processing within the mixing jug. In use, the detachable stirring shaft fits snugly between the opening of the lid and the curb at the bottom of the sieve retainer.

In operation, one lowers the detachable stirring shaft into the sieve retainer and put the appropriate amount of beans into the same retainer before closing the lid. One fills the mixing jug with the suggested amount of water before lowering the sieve retainer together with the detachable stirring shaft and beans. Next, one places the mixing jug onto the heating plate. Presto! You are ready to brew your first batch of soy bean milk by lowering the cam assembly. Once done, one disengages the detachable stirring shaft from the cam assembly, removes the mixing jug and prepares to serve the processed soy bean milk.

The new food processing appliance also features electronic and temperature control and known software for processing a variety bean products.

Oh, before we forget, we identify U.S. Patent No. 5,201,263 as the design closest to our appliance. However, the cooking utensil is not suitable for preparing soy bean milk or related bean beverages.

We intend to exhibit the prototype appliance in a trade show next month. Will you be so kind as to prepare a patent specification with claims for a new patent application for our appliance?

Yours faithfully,

Venture Capitalist

PAPER A: PREPARATION OF A PATENT SPECIFICATION
24 November 2003, Monday
1400 – 1700 hrs

Maximum Time: 3 Hours + 15 Minutes of reading time **Maximum Marks: 100 Points**

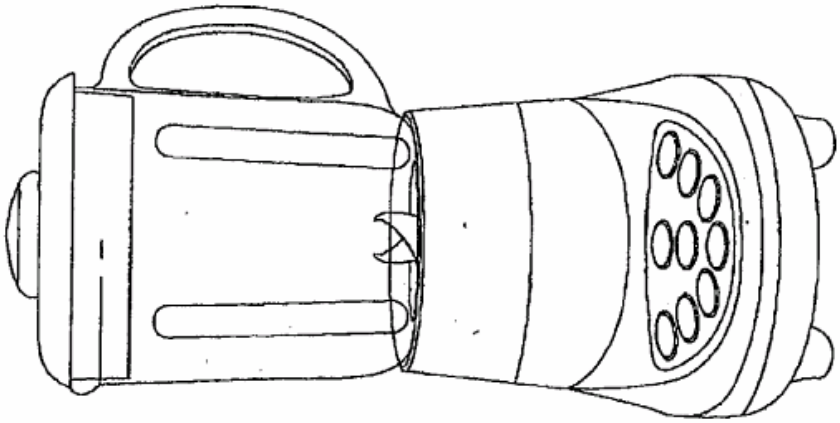

FIG. 2

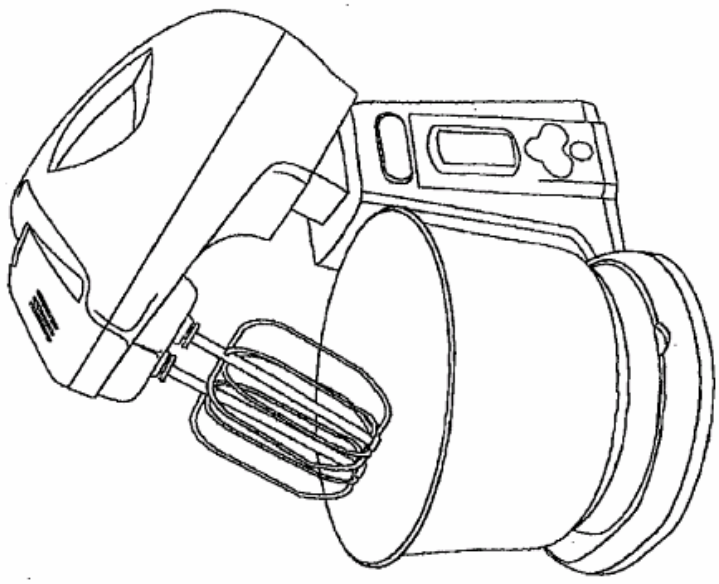

FIG. 1

PAPER A: PREPARATION OF A PATENT SPECIFICATION
24 November 2003, Monday
1400 – 1700 hrs

Maximum Time: 3 Hours + 15 Minutes of reading time **Maximum Marks: 100 Points**

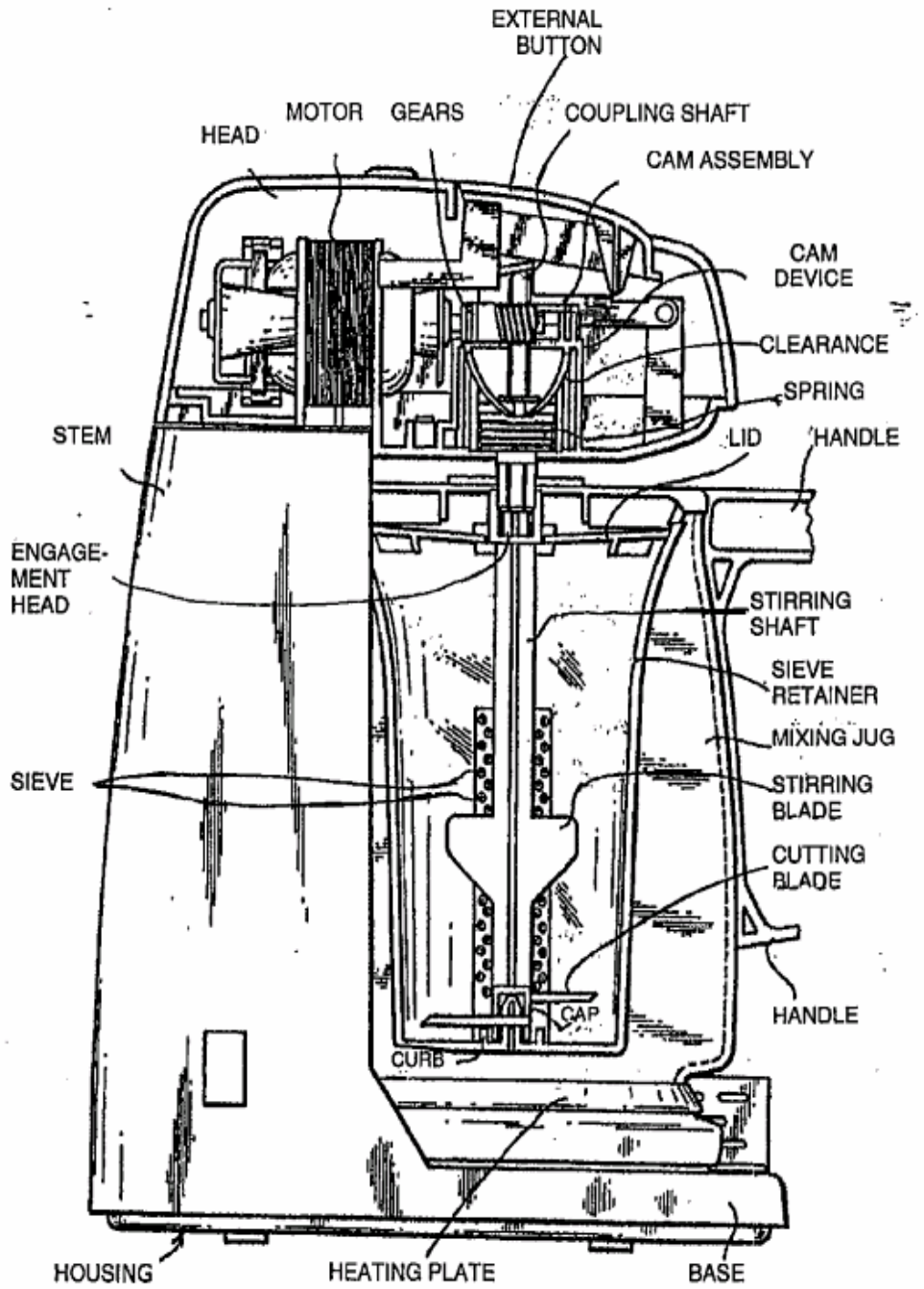

FIG. 3

PAPER A: PREPARATION OF A PATENT SPECIFICATION
24 November 2003, Monday
1400 – 1700 hrs

Maximum Time: 3 Hours + 15 Minutes of reading time **Maximum Marks: 100 Points**

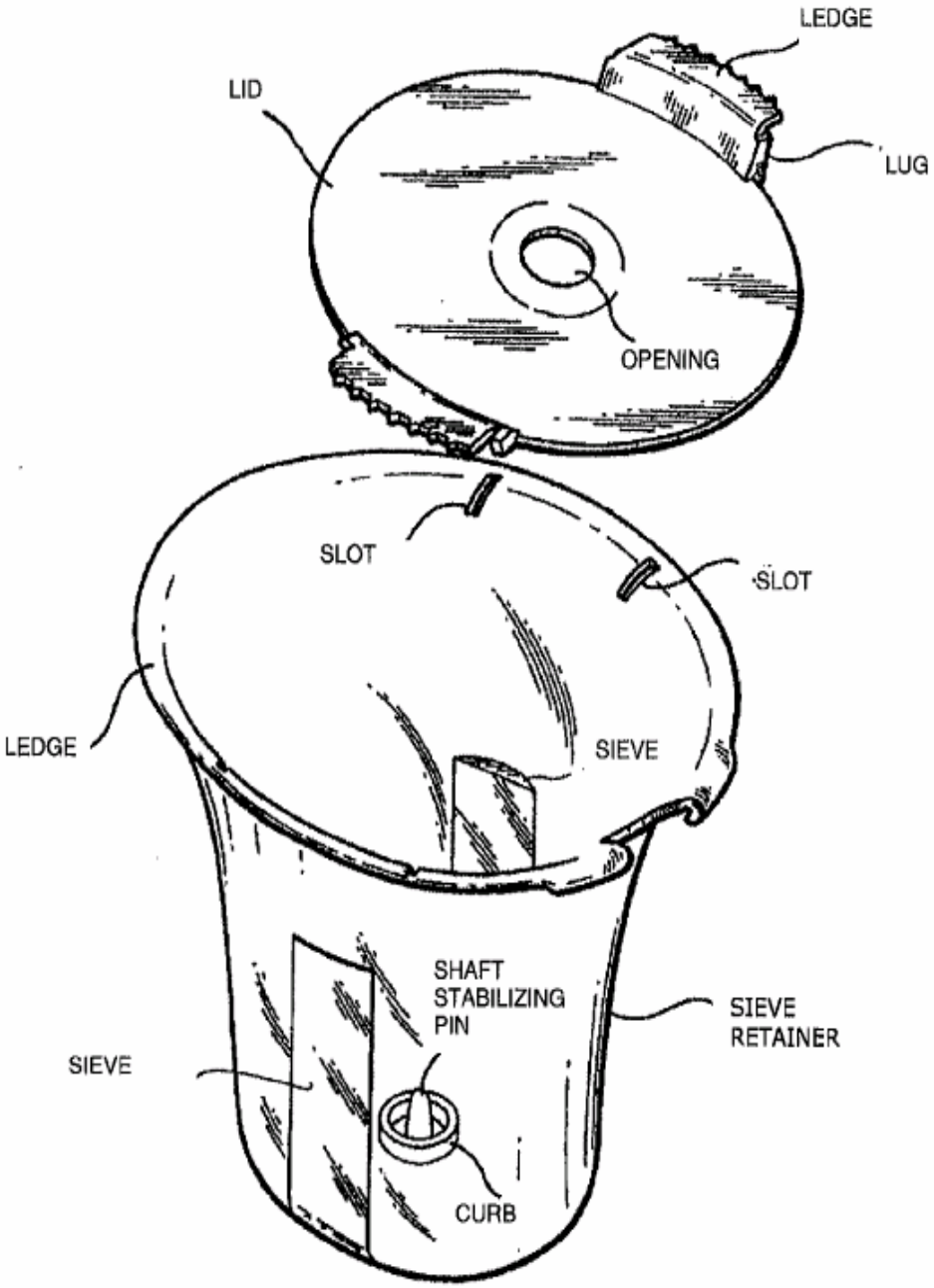

FIG.4

PAPER A: PREPARATION OF A PATENT SPECIFICATION
24 November 2003, Monday
1400 – 1700 hrs

Maximum Time: 3 Hours + 15 Minutes of reading time **Maximum Marks: 100 Points**

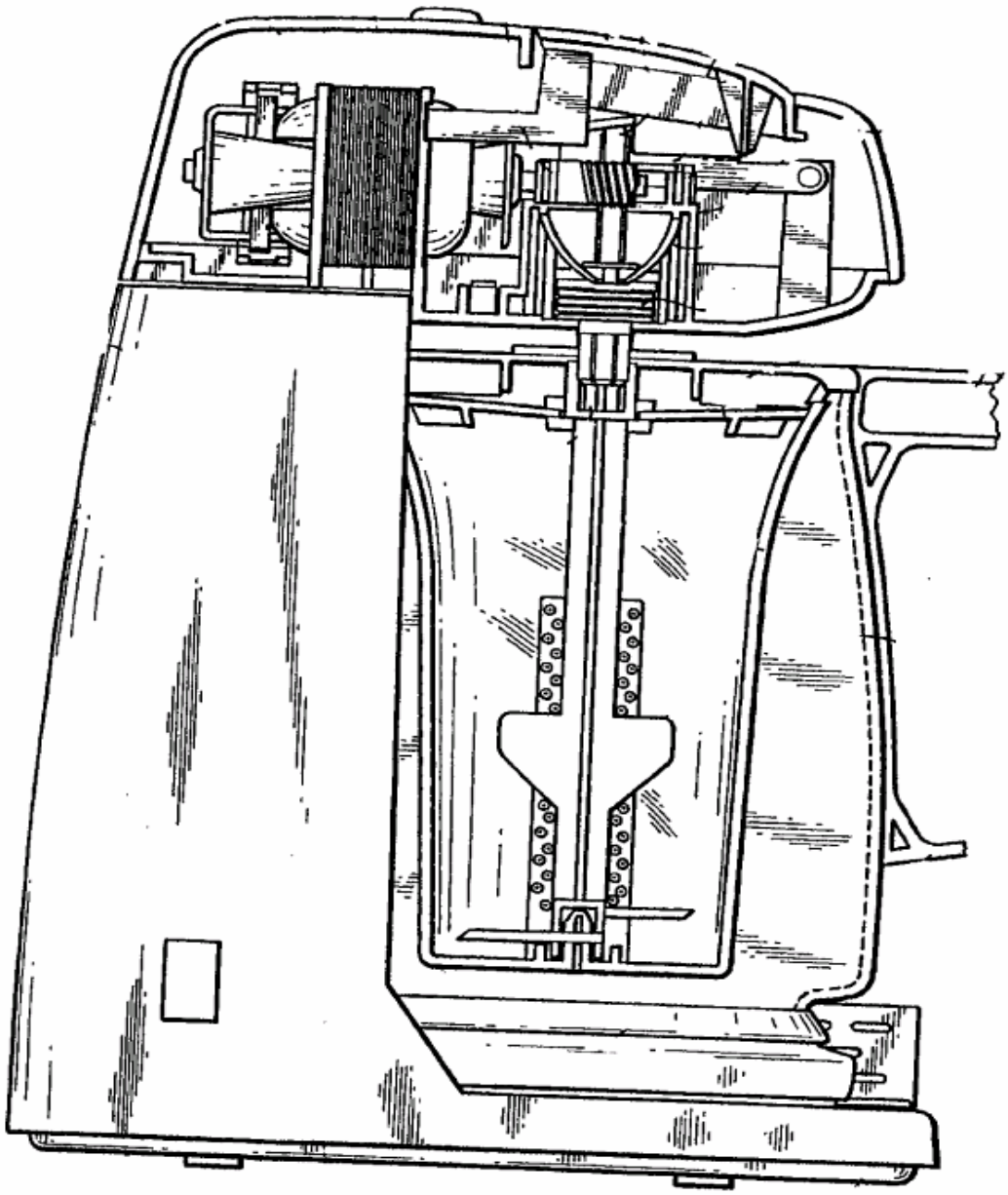

FIG.3

PAPER A: PREPARATION OF A PATENT SPECIFICATION
24 November 2003, Monday
1400 – 1700 hrs

Maximum Time: 3 Hours + 15 Minutes of reading time **Maximum Marks: 100 Points**

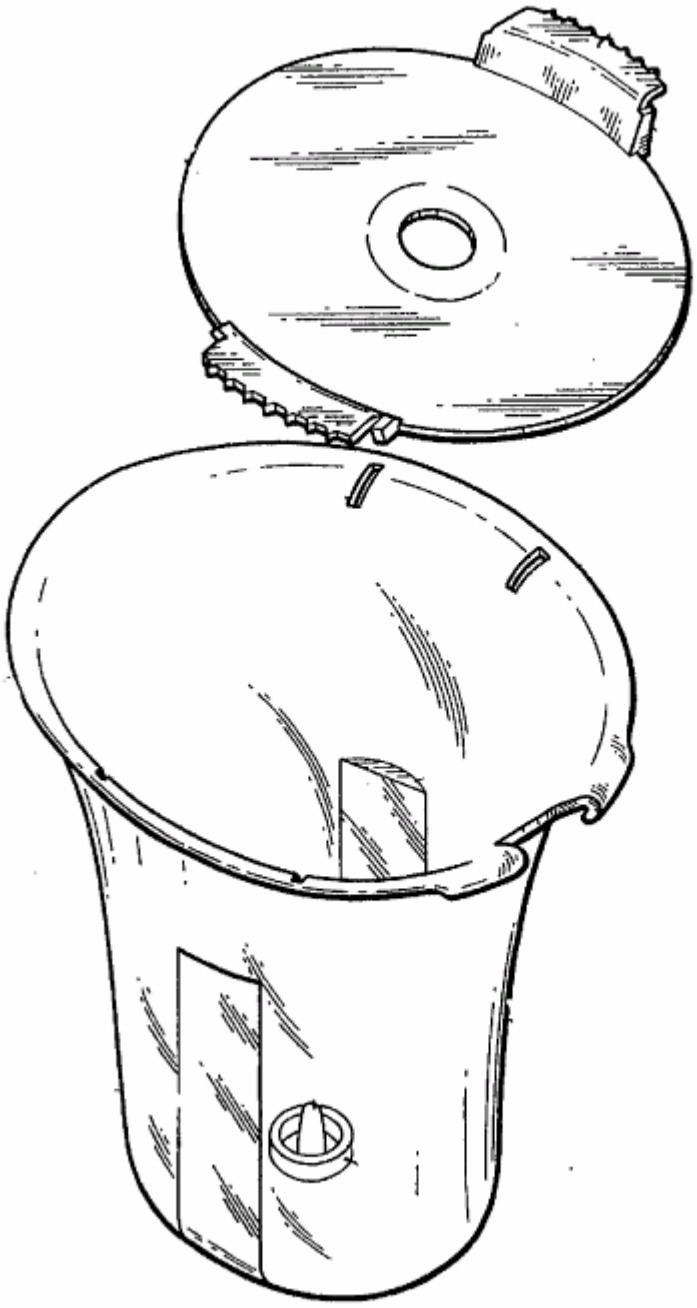

FIG.4

PAPER A: PREPARATION OF A PATENT SPECIFICATION
24 November 2003, Monday
1400 – 1700 hrs

Maximum Time: 3 Hours + 15 Minutes of reading time **Maximum Marks: 100 Points**

U.S. Patent No. 5,201,263 (EXTRACT)

A cooking utensil with a built-in automatic stirring device includes a pot body 1 and a cover 2 which is provided on an opened top of the pot body 1 and which confines an enclosed space 23. A rotary knob 3 is rotatably mounted on the cover 2 and has an axial shaft 31 which extends into the enclosed space 23. The rotary knob 3 is rotated so as to set a desired stirring method. A gear set 4 is provided inside the enclosed space 23 and rotates with the axial shaft 31 of the rotary knob 3. A stirring implement 5 has a shaft portion 53 which is rotatably driven by the gear set 4 and which extends into the pot body 1.

The shaft portion 53 has a lower end which is disposed adjacent to a closed bottom of the pot body and which is provided with at least one radially extending stirring blade 54. A spiral spring 43 is connected to the gear set 4 and is wound when the rotary knob 3 is rotated. The spiral spring 43 gradually unwinds to drive rotatably the gear set 4 and cause axial rotation of the stirring implement 5 for the duration of the stirring period.

PAPER A: PREPARATION OF A PATENT SPECIFICATION
24 November 2003, Monday
1400 – 1700 hrs

Maximum Time: 3 Hours + 15 Minutes of reading time **Maximum Marks: 100 Points**
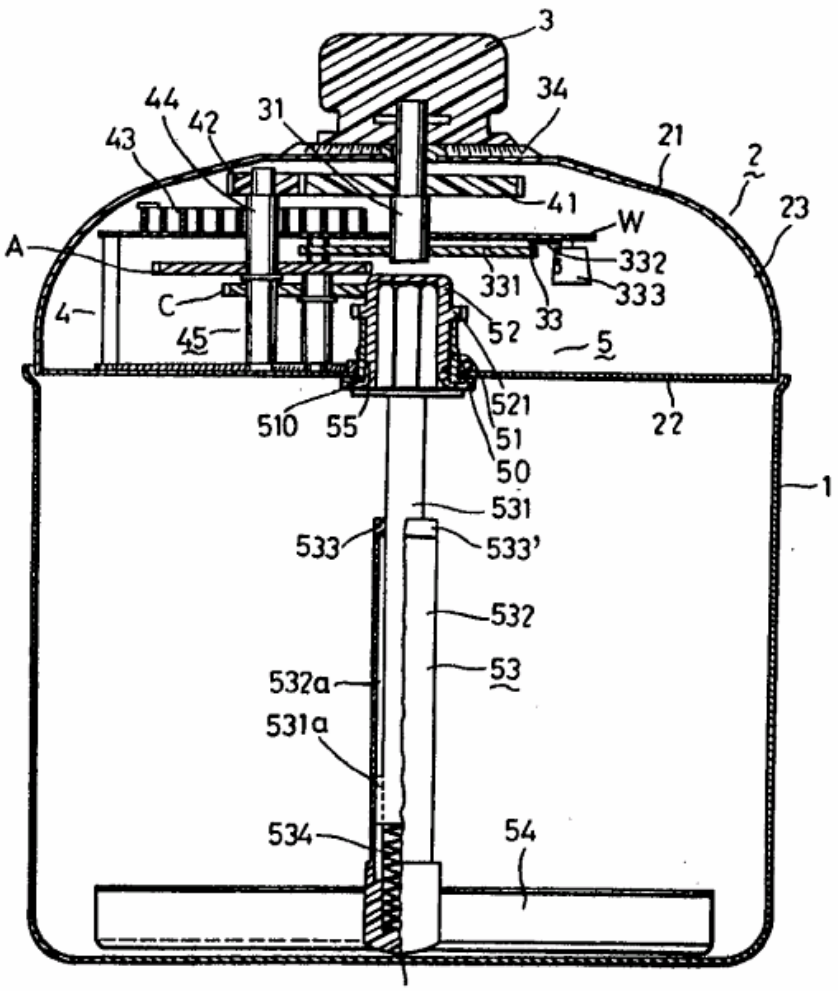
U.S. Patent **Apr. 13, 1993** **Sheet 1 of 5** **5,201,263**