INTELLECTUAL PROPERTY OFFICE OF SINGAPORE

PATENT AGENTS QUALIFYING EXAMINATION

PAPER B: AMENDMENT OF A PATENT SPECIFICATION (BEFORE OR AFTER GRANT)
26 November 2003, Wednesday
1400 – 1700 hrs

Maximum Time: 3 Hours + 15 Minutes of reading time **Maximum Marks: 100 Points**

LIGHTING UP YOUR CREATIVITY

INSTRUCTION TO CANDIDATES

1. This Paper consists of 12 sheets, including this cover sheet.

2. 15 minutes of reading time is provided. You are advised to spend this time reading the instructions and the question(s) before you attempt to answer the question(s).

3. Write your answers in English. Answers in any other language will not be marked.

4. Only your answers to the question(s) written or pasted in the Answer Booklet (that is provided by the Examination Secretariat) would be considered. You are advised to write on one side of each sheet in the Answer Booklet and to commence your answer to each question (where applicable) on a fresh sheet.

5. You should accept the facts given in the paper and not use any special knowledge you may have. Assume also that the prior art given is exhaustive.

6. In this paper you should assume that a Singapore Patent Application has been filed and that a Written Opinion has been issued. You have sent the Written Opinion to the client who has replied in the attached letter.

   Your task is to prepare a draft reply to the Written Opinion to the Intellectual Property Office of Singapore (IPOS). (For the purposes of this paper you do not need to propose any amendments to the description of the Patent Application).

   The basis for any amendment proposed to the claims should be indicated where possible candidates must cite sections, rules or other legal basis relevant to their answers.

PAPER B: AMENDMENT OF A PATENT SPECIFICATION (BEFORE OR AFTER GRANT)
26 November 2003, Wednesday
1400 – 1700 hrs

Maximum Time: 3 Hours + 15 Minutes of reading time **Maximum Marks: 100 Points**

Client's Letter

Dear Patent Agent,

Thank you for the written opinion and the cited prior art.

I'm afraid I do not understand why the objection. The devices in the prior art look quite different to my invention and operate in a different way.

Please can you prepare a reply to the opinion?

Yours sincerely,

Client

PAPER B: AMENDMENT OF A PATENT SPECIFICATION (BEFORE OR AFTER GRANT)
26 November 2003, Wednesday
1400 – 1700 hrs

Maximum Time: 3 Hours + 15 Minutes of reading time **Maximum Marks: 100 Points**

Singapore Patent Application No. 56789

The present invention relates to a waste plug for use with sinks and wash hand basins.

Wash hand basins and sinks are typically provided with a plug for covering the outlet (known as the "waste") to prevent escape of water from the basin or sink. A typical plug is formed from a simple disc of rubber or plastics secured to the basin or sink by a chain. The plug is an interference fit in the waste. Removal of the plug from the waste is effected by gripping and pulling the chain. However, people with restricted manual dexterity do not find it easy to use these plugs.

According to the invention, there is provided a waste plug for a waste outlet comprising a sealing member on a support and movable between a position where the sealing member closes the outlet and a position where the waste outlet is open, means being provided for holding the sealing member in the open position.

In a preferred embodiment of the invention the means for holding the plug in the open position comprises a spring. The sealing member is movable to the closed position against the bias of the spring.

The invention will now be described by way of example with reference to the accompanying drawing which shows an axial section through a plug.

Referring to the drawing a plug 10 has a head portion 12 supported by a stem portion 14 and a mounting portion 16. The head portion includes a resilient elastomeric seal ring 18 mounted on a metal cover member 20. The metal cover is secured to the stem portion by threads 22.

The stem portion consists of two concentric cylindrical members 24, 26 at the centre of the cover member 20. The lower cylindrical member 26 is telescopically received in the upper member 24. A compression spring 28 is arranged coaxially within the cylindrical members 24 and 26 and urges them apart.

A conventional latching device indicated generally at 30, 32 limits the travel of the cylindrical members 24, 26 towards and away from each other and in addition can releasably hold the member 24 in a position where the seal can close a waste outlet as will be described.

The mounting portion 16 of the plug comprises a smooth-surface cylindrical member 36 secured to the lower end of cylindrical member 26 of the stem 14 by means of a threaded stud 38.

PAPER B: AMENDMENT OF A PATENT SPECIFICATION (BEFORE OR AFTER GRANT)
26 November 2003, Wednesday
1400 – 1700 hrs

Maximum Time: 3 Hours + 15 Minutes of reading time **Maximum Marks: 100 Points**

In use the plug 10 operates as follows. The assembly is located in a conventional sink waste 50, with the smooth cylindrical member 36 seated in a corresponding opening 52 at the centre of a spider 54 provided in the waste 50. The lower surface 40 of the stem 14 abuts an upper surface of the spider thereby supporting the plug in the waste outlet.

As illustrated in the drawing the compression spring 28 biases the cylindrical member 24 upwardly and the plug is in the open position which allows water to flow from the sink into the waste. To close the plug, pressure is applied to the top of the cover 20, for example with the flat of the hand. This causes the cylindrical member 24 to move downwards around cylindrical member 26 against the spring 28 until the seal 18 engages the top of the waste 50 thereby closing the waste outlet. The plug is held in the closed position by the latching device 30 and 32.

To open the plug again, the user again applies pressure to the upper surface of the cover 20 to unlatch the cylindrical member 24 (in much the same way that a projector screen is unlatched) whereupon the spring 28 returns the plug to the open position.

It will be evident from the above description that the plug of the invention is easily operated by people with limited dexterity.

Claims

1. A waste plug for a waste outlet comprising a sealing member on a support and movable between a position where the sealing member closes the outlet and a position where the outlet is open, means being provided for holding the sealing member in the open position.

2. A waste plug as claimed in claim 1, wherein the means for holding the sealing member in the open position comprises a spring.

3. A waste plug as claimed in claim 2, wherein the sealing member is movable to the closed position against the bias of the spring.

INTELLECTUAL PROPERTY OFFICE OF SINGAPORE

PATENT AGENTS QUALIFYING EXAMINATION

PAPER B: AMENDMENT OF A PATENT SPECIFICATION (BEFORE OR AFTER GRANT)
26 November 2003, Wednesday
1400 – 1700 hrs

Maximum Time: 3 Hours + 15 Minutes of reading time **Maximum Marks: 100 Points**

Singapore Patent Application No. 56789

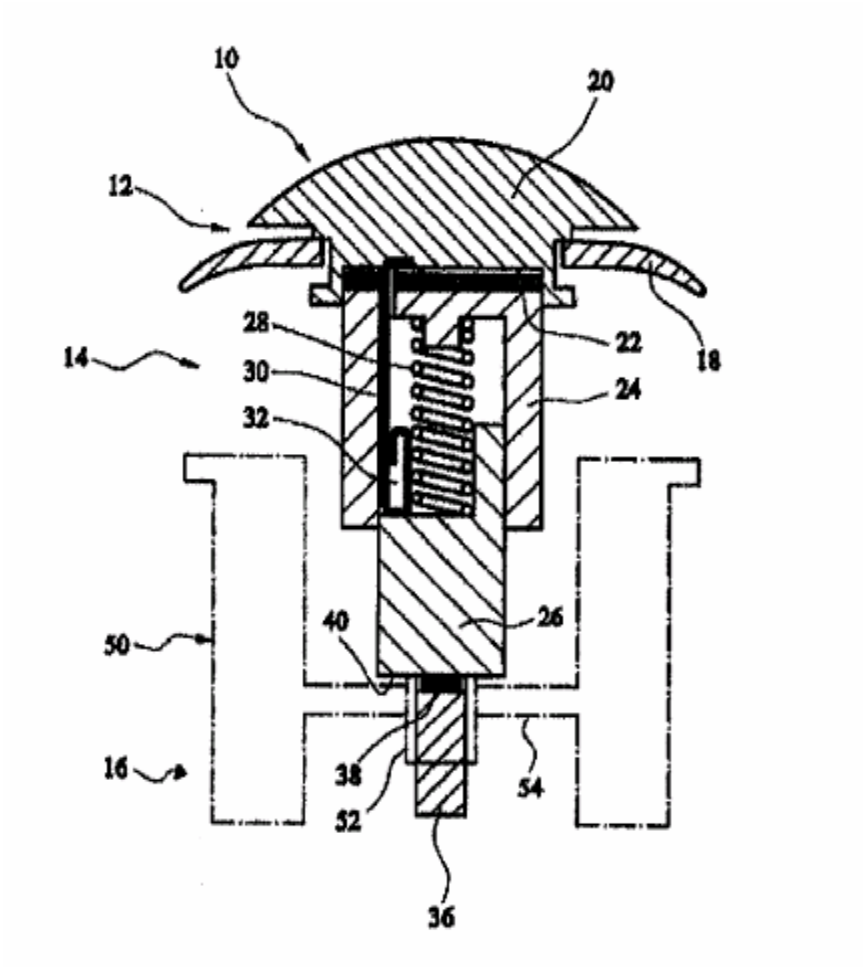

PAPER B: AMENDMENT OF A PATENT SPECIFICATION (BEFORE OR AFTER GRANT)
26 November 2003, Wednesday
1400 – 1700 hrs

Maximum Time: 3 Hours + 15 Minutes of reading time **Maximum Marks: 100 Points**

Written Opinion

Statement

Novelty (N)	Claims 1 – 3	No
Inventive Step (S)	Claims 1 – 3	Yes
Industrial Applicability	Claims 1 – 3	Yes

Citations and explanations

The subject matter of claims 1 – 3 is not novel. Your attention is drawn to GB Patent Application 2243077 and the publication "Bathroom News" which describe the waste plug of the claims.

PAPER B: AMENDMENT OF A PATENT SPECIFICATION (BEFORE OR AFTER GRANT)
26 November 2003, Wednesday
1400 – 1700 hrs

Maximum Time: 3 Hours + 15 Minutes of reading time **Maximum Marks: 100 Points**

GB Patent Application 2243077 (Extract)

"Retractable Plug Assembly"

FIELD OF THE INVENTION

The present invention relates to a retractable plug assembly for the waste outlet of a wash tub such as a sink or bath.

BACKGROUND OF THE INVENTION

Plugs for waste outlets for draining sinks or baths in present day use are normally held suspended by a chain connected to the overflow outlet plate.

When not in use the chain with the plug is generally hung around the water tap or simply left unplugged on the bottom of the wash tub.

The whole arrangement tends to lead to unsightliness and lacks design sophistication.

SUMMARY OF THE INVENTION

It is an object of the present invention to overcome the disadvantages of the prior art.

According to the invention there is provided a retractable plug assembly for the waste outlet of a wash tub such as a sink or bath comprising a support plate for attachment to the tub, and a closure plug for the waste outlet, retractably mounted to said support plate.

Preferably the support plate is designed to cover the normally provided overflow opening in a sink or bath, being in the form of a circular or oval plate provided with an overflow opening.

Advantageously the means for retracting the plug is in the form of a retractor reel mounted within the housing of the support plate.

The housing forms the upper part of the support plate, the lower part being in the form of a thinner flat planar section thereby to form with the housing a reception area for the plug in the retractable position.

The assembly as above described exhibits a general neat and tidy appearance in particular, since the plug and chord form a merged unit with the support holder in the retracted position.

BRIEF DESCRIPTION OF THE DRAWINGS

The invention will now be described by way of example with reference to the accompanying drawings wherein:

Fig 1 shows a front and side view of a retractable plug assembly according to one embodiment of the invention;

Fig 2 is a front view of the plug assembly of Fig. 1 with the plug withdrawn from its retractable position;

Fig 3 is a perspective view and side view of the retractable plug assembly of Fig. 1 with the plug in a withdrawn position; and

Fig 4 is a front and side view of an alternative embodiment of the invention.

BEST MODES OF CARRYING OUT THE INVENTION

The retractable plug assembly shown in the drawings more particularly Figs. 1 to 3, comprises an oval shaped support plate 1 designed to fit over the normally provided overflow outlet of a sink or bath.

The support plate 1 is provided with an upper housing 2 in which a retractor reel 3 is mounted as shown.

The lower portion 4 of the support plate 1 is flat and is separated from the upper housing by an arcuate opening 5 from which extends the reel wire or chain 6 attached to a closure plug 7.

The flat area 4 of the support plate 1 bounded by the outer edges of the plate 1 and the upper arcuate opening 5, forms an ideal reception area for the plug 7 with the reel 3 in its fully retracted position.

An overflow opening 8 is provided in the flat plate portion as shown which is exposed when the plug 7 is withdrawn from the reel 3 and inserted in a plug hole (not shown). In an alternative embodiment as shown in Fig 4, the plug itself may house the retractor reel 3, instead of the support plate 1.

Although the invention has been described with reference to a complete assembly comprising a support plate and plug/chord attachment, it will be appreciated that the retractable plug and chord construction shown in Fig 4 may be used separately from the specially designed support plate shown in Figs 1 to 3 and attached to existing overflow outlet plates to replace the traditional non-retractable plug and chain attachments.

Although not shown a release/locking mechanism may be provided in the housing 2 of the Fig 1 to 3 embodiments or plug 7 of the embodiment shown in Fig 4, such that the chord may be locked within its withdrawn position with the plug 7 in a waste outlet. A pull on the chord will release the locking mechanism to permit retraction. Such a release/locking mechanism will be well known to those skilled in the art, for example of the type used in the construction of retractable roller blinds.

The assembly above described is easy to operate and removes the nuisance of a freely mounted plug and chain particularly when not in use.

PAPER B: AMENDMENT OF A PATENT SPECIFICATION (BEFORE OR AFTER GRANT)
26 November 2003, Wednesday
1400 – 1700 hrs

Maximum Time: 3 Hours + 15 Minutes of reading time **Maximum Marks: 100 Points**

GB Patent Application 2243077

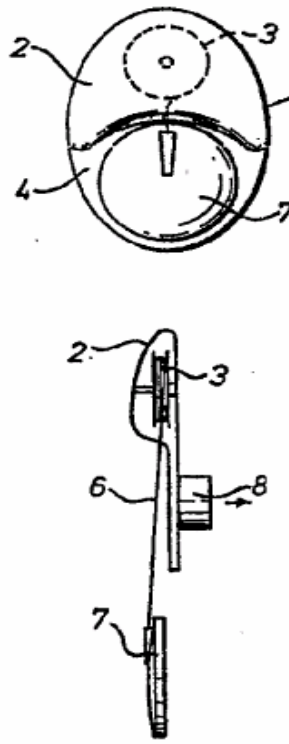

Fig.1.

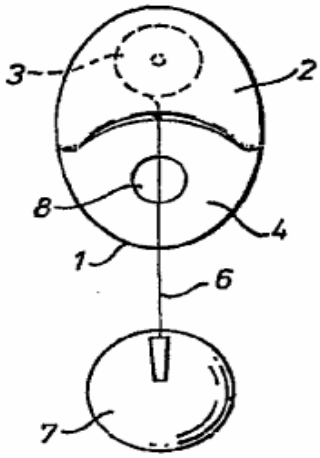

Fig.2.

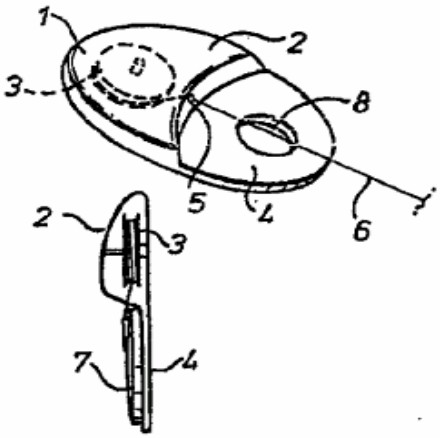

Fig.3.

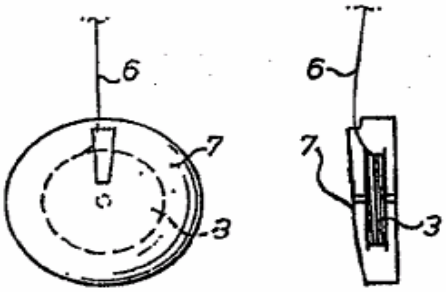

Fig.4.

PAPER B: AMENDMENT OF A PATENT SPECIFICATION (BEFORE OR AFTER GRANT)
26 November 2003, Wednesday
1400 – 1700 hrs

Maximum Time: 3 Hours + 15 Minutes of reading time **Maximum Marks: 100 Points**

Bathroom News (Extract)

A new type of waste plug is now on the market. The plug comprises a dished body 10 having a series of apertures 12 in its side wall. At the centre of the underside of the body 10 a rod 14 projects downwardly. A pin 16 projects radially from the rod 14 about half way along the length of the rod. The pin 16 is movably seated in a radial bore in the rod 14 and urged outwardly by a spring 18. A seal 20 of resilient material is provided on the underside of the body 10.

The rod 14 is receivable in the central bore of a spider such as is conventionally provided at or near the top of the waste outlet of, for example a basin or bath.

In use the rod 14 is inserted in the central bore of a spider. As the plug is moved downwardly the pin 16 engages the top of the spider bore and the plug is thereby supported with clearance between the underside of the plug body and the waste pipe. Downward pressure applied to the body will cause the pin 16 to be moved radially inwardly against the spring 18 thus allowing the body to move downward until the seal 20 closes the waste pipe.

To open the waste pipe the plug is pulled upward until the pin is free to move radially outward when the plug can be supported by pin resting on the top of the spider again.

PAPER B: AMENDMENT OF A PATENT SPECIFICATION (BEFORE OR AFTER GRANT)
26 November 2003, Wednesday
1400 – 1700 hrs

Maximum Time: 3 Hours + 15 Minutes of reading time **Maximum Marks: 100 Points**

BATHROOM NEWS

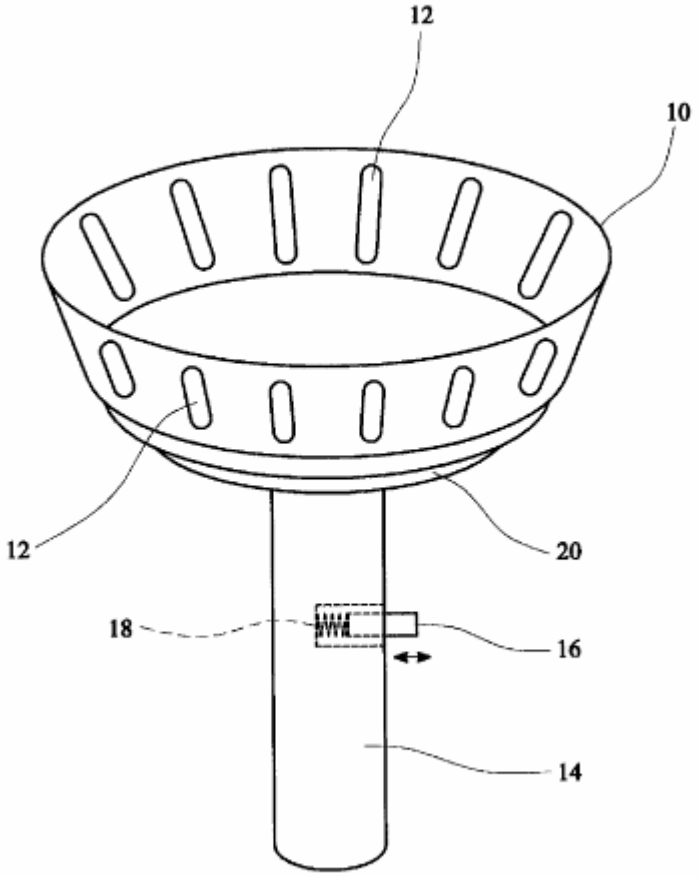

PAPER B: AMENDMENT OF A PATENT SPECIFICATION (BEFORE OR AFTER GRANT)
26 November 2003, Wednesday
1400 – 1700 hrs

Maximum Time: 3 Hours + 15 Minutes of reading time **Maximum Marks: 100 Points**

Possible amendment to overcome prior art

In the plug of the invention the tension spring acts axially to open the plug. In the prior art the plug of 2243077 is opened by a spring loaded reel and the "Bathroom News" Plug the spring acts at right angles to the axis of the plug.