INTELLECTUAL PROPERTY OFFICE OF SINGAPORE

PATENT AGENTS QUALIFYING EXAMINATION

PAPER C: INFRINGEMENT AND VALIDITY OF SINGAPORE PATENT
27 November 2003, Thursday
1400 – 1700 hrs

Maximum Time: 3 Hours + 15 Minutes of reading time **Maximum Marks: 100 Points**

LIGHTING UP YOUR CREATIVITY

INSTRUCTION TO CANDIDATES

1. This Paper consists of 9 sheets, including this cover sheet.

2. 15 minutes of reading time is provided. You are advised to spend this time reading the instructions and the question(s) before you attempt to answer the question(s).

3. Write your answers in English. Answers in any other language will not be marked.

4. Only your answers to the question(s) written or pasted in the Answer Booklet (that is provided by the Examination Secretariat) would be considered. You are advised to write on one side of each sheet in the Answer Booklet and to commence your answer to each question (where applicable) on a fresh sheet.

5. Write on one side of the paper only.

6. Marks are awarded more for the points selected for discussion and reasoning displayed than for conclusions reached.

7. You should accept the facts given in the papers and not use any special knowledge you may have. Assume also that the prior art given is exhaustive.

PAPER C: INFRINGEMENT AND VALIDITY OF SINGAPORE PATENT
27 November 2003, Thursday
1400 – 1700 hrs

Maximum Time: 3 Hours + 15 Minutes of reading time **Maximum Marks: 100 Points**

Client's Letter

Dear Patent Agent,

I am a supplier of sun tan creams. These are sold in containers, usually of plastic, having a plastic cap which is screw threaded onto the top of the container. The cap has a closed top with a small hole in it through which the sun tan cream can be dispensed. Attached by an integral hinge to the cap is a plastic flip top with a projecting boss which plugs the hole in the cap when the flip top is pushed onto the top of the cap. The hinge is of the kind which toggles the flip top between on open position and a nearly closed position. In addition the flip top snaps onto the cap so as to hold the flip top in the closed position on the cap. I attach a sketch of my container.

I have now received a letter from the owner of Singapore Patent No. 600,000 telling me that I infringe the patent. I do not understand this as the patent seems to be concerned with detergent bottles rather than containers for sun tan cream. Moreover I think my container is quite similar to the conventional form of toothpaste tube which has been around for years. I attach a sketch of that as well. As you will see that has a flip top with a hinge that toggles between on open position and a nearly closed position.

Please advise me where I stand.

Yours faithfully,
Client

You establish the following facts:

Singapore patent No.600,000 is in force.

A search for prior art reveals GB Patent Application 2195619.

Your client has very limited financial resources.

PAPER C: INFRINGEMENT AND VALIDITY OF SINGAPORE PATENT
27 November 2003, Thursday
1400 – 1700 hrs

Maximum Time: 3 Hours + 15 Minutes of reading time **Maximum Marks: 100 Points**

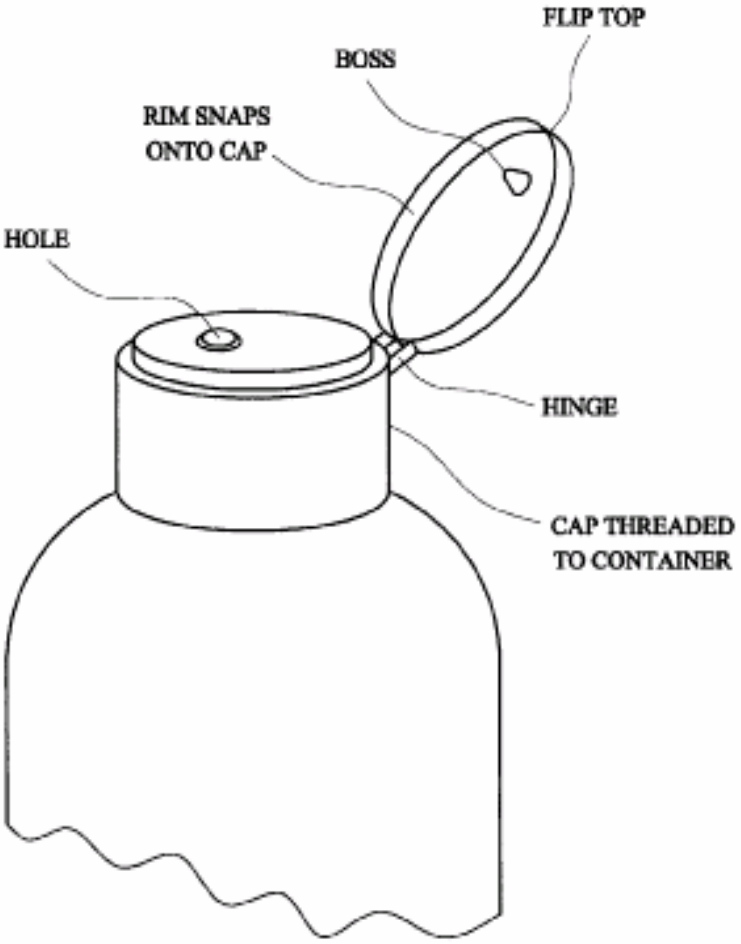

CLIENT'S CONTAINER

PAPER C: INFRINGEMENT AND VALIDITY OF SINGAPORE PATENT
27 November 2003, Thursday
1400 – 1700 hrs

Maximum Time: 3 Hours + 15 Minutes of reading time **Maximum Marks: 100 Points**

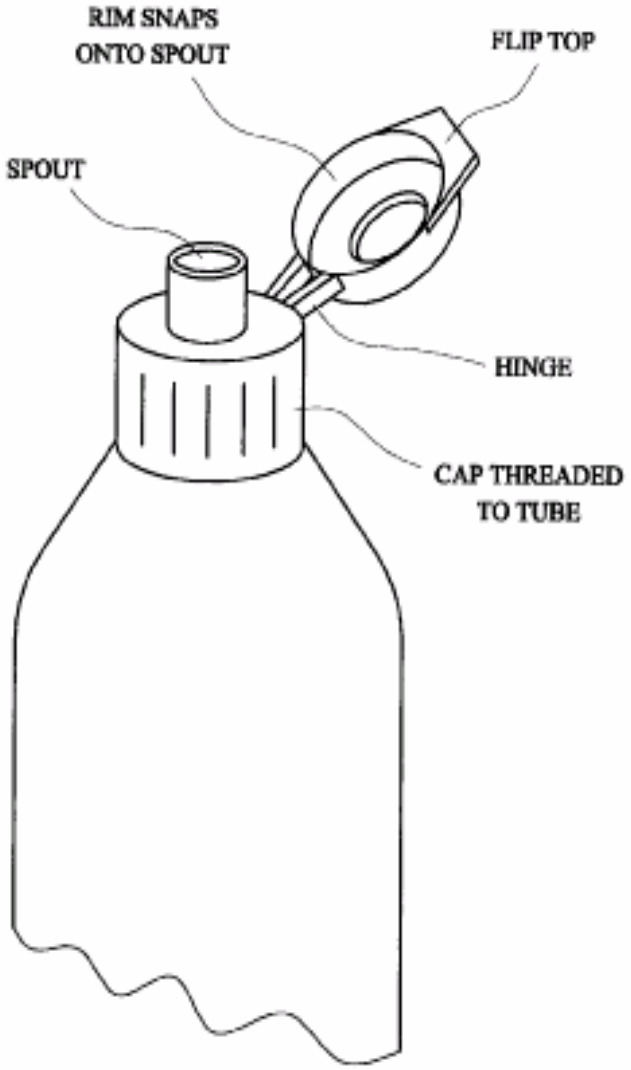

TOOTH PASTE TUBE

PAPER C: INFRINGEMENT AND VALIDITY OF SINGAPORE PATENT
27 November 2003, Thursday
1400 – 1700 hrs

Maximum Time: 3 Hours + 15 Minutes of reading time **Maximum Marks: 100 Points**

Singapore Patent 600,000

This invention relates to a closure for a detergent bottle.

Many different kinds of closures for detergent bottles have been proposed in the past. However because the viscosity of detergent liquid increase on exposure to air it can happen that after a period of time, the dispensing aperture of the closure becomes clogged with solidifying detergent. The present invention has been made with his problem in mind.

According to the invention there is provided a closure for a detergent bottle comprising a cylindrical body internally profiled for engagement with the neck of a bottle, a spout at the top of the cylindrical body and a cap for closing the spout, the cap being linked to the body by a hinge.

Preferably the cap is provided with a plug which can be received in the spout. Thus when the cap is closed any detergent accumulated in the spout is dislodged.

A specific embodiment of the invention will now be described by way of example with reference to the accompanying drawing which shows a closure in side view partly in perspective.

Referring to the drawing the closure comprises a cylindrical body 10 which is internally threaded for engagement to the neck of a detergent bottle 12. A spout 14 extends from the top of the body. The internal bore 16 of the spout is relatively small but is flared outwardly at its end 18. The spout is surrounded by a wall 20.

A flip top cap 22 is hinged to a bracket 24 on the side of the body 10. A plug 26 extends from the centre of the cap so that when the cap is fitted over the spout the plug enters the bore 16 and prevents build up of detergent in the spout. The cap also has a rim 28 which is profiled so as to be a snap fit into the wall 20 around the spout.

Preferably the closure is moulded from plastic and the hinge 30 can then be integral with the rest of the assembly. Preferably the hinge is biased to toggle the cap between an open position (as illustrated) and a position adjacent the spout.

In use the annular channel 32 defined by the wall 20 with the top of the body and the spout collects detergent that may flow down the outside of the spout after detergent has been dispensed. This useful feature prevents detergent from accumulating on the outside of the bottle.

PAPER C: INFRINGEMENT AND VALIDITY OF SINGAPORE PATENT
27 November 2003, Thursday
1400 – 1700 hrs

Maximum Time: 3 Hours + 15 Minutes of reading time **Maximum Marks: 100 Points**

Claims

1. A closure for a detergent bottle comprising a cylindrical body, a spout at the top of the cylindrical body and a cap for closing the spout, the cap being linked to the body by a hinge.

2. A closure as claimed in claim 1, wherein a plug is provided on the cap, the plug being receivable in the spout.

3. A closure as claimed in claim 1 or claim 2, wherein the cap is a snap fit over the spout.

4. A closure as claimed in claim 1, wherein the body is internally profiled for engagement with the neck of a bottle.

5. A closure as claimed in claim 2, wherein the hinge is biased to toggle the cap between an open position and a position adjacent the spout.

PAPER C: INFRINGEMENT AND VALIDITY OF SINGAPORE PATENT
27 November 2003, Thursday
1400 – 1700 hrs

Maximum Time: 3 Hours + 15 Minutes of reading time **Maximum Marks: 100 Points**

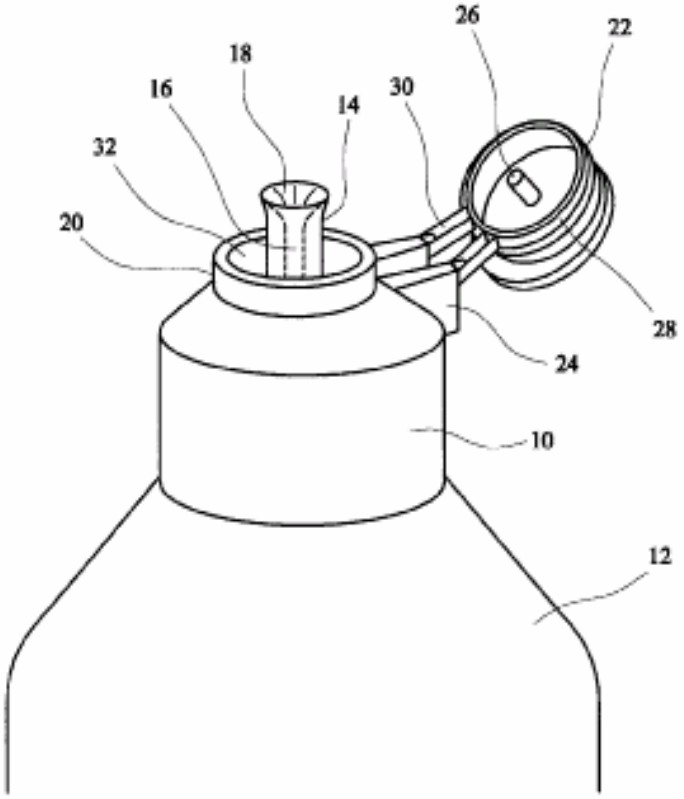

SINGAPORE PATENT 600,000

PAPER C: INFRINGEMENT AND VALIDITY OF SINGAPORE PATENT
27 November 2003, Thursday
1400 – 1700 hrs

Maximum Time: 3 Hours + 15 Minutes of reading time **Maximum Marks: 100 Points**

GB Patent Application 2195619 (Extract)

This invention relates to flip top caps for use on bottles or other containers.

The flip top cap is of moulded plastics material and comprises a body 5 having a tubular neck 6 for egress of, for example, liquid detergent from a bottle 7 onto which the cap is fitted.

The tubular neck 6 is closable by a closed top 8 secured to the cap body by a flexible connector 9 whereby the top 8 can be moved between open and closed positions shown.

The cap body has depending sleeves 10 and 11 between which a passage 12 is defined which receives the tubular neck 13 of the bottle.

Projections 14 are provided on the inner surface of the sleeve 11 and the outer surface of sleeve 10 to improve the grip between the sleeves and the tubular neck 13 onto which the cap can be pushed.

PAPER C: INFRINGEMENT AND VALIDITY OF SINGAPORE PATENT
27 November 2003, Thursday
1400 – 1700 hrs

Maximum Time: 3 Hours + 15 Minutes of reading time **Maximum Marks: 100 Points**

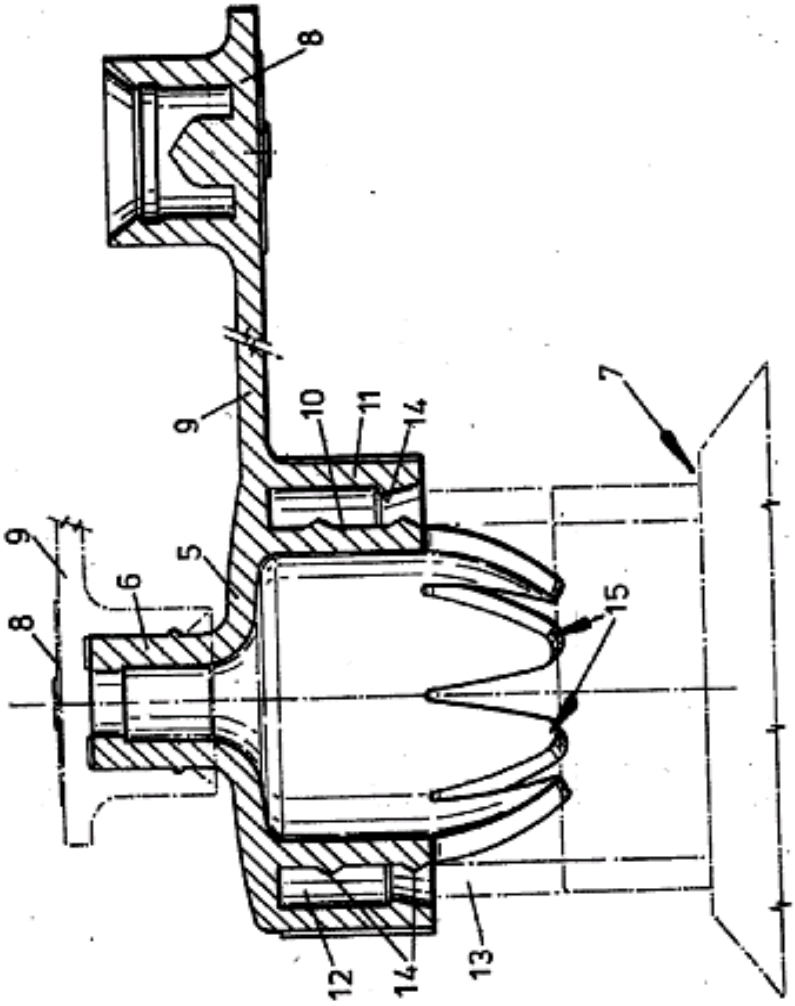

GB PATENT APPLICATION 2195619