INTELLECTUAL PROPERTY OFFICE OF SINGAPORE

QUALIFYING EXAMINATION FOR THE REGISTRATION OF PATENT AGENTS

PAPER B: AMENDMENT OF A PATENT SPECIFICATION (BEFORE OR AFTER GRANT)
26 November 2002, Tuesday
1400 – 1700 hrs

Maximum Time: 3 Hours + 15 Minutes of reading time **Maximum Marks: 100 Points**

LIGHTING UP YOUR CREATIVITY

INSTRUCTION TO CANDIDATES

1. This Paper consists of 11 sheets, including this cover sheet.

2. 15 minutes of reading time is provided. You are advised to spend this time reading the instructions and the question(s) before you attempt to answer the question(s).

3. Write your answers in English. Answers in any other language will not be marked.

4. Only your answers to the question(s) written or pasted in the Answer Booklet (that is provided by the Examination Secretariat) would be considered. You are advised to write on one side of each sheet in the Answer Booklet and to commence your answer to each question (where applicable) on a fresh sheet.

5. You should accept the facts given in the paper and not use any special knowledge you may have. Assume also that the prior art given is exhaustive.

6. In this paper you should assume that a Singapore Patent Application has been filed and that a Written Opinion has been issued. You have sent the Written Opinion to the client who has replied in the attached letter.

   Your task is to prepare a draft reply to the Written Opinion to the Intellectual Property Office of Singapore (IPOS). (For the purposes of this paper you do not need to propose any amendments to the description of the Patent Application).

   The basis for any amendment proposed to the claims should be indicated where possible candidates must cite sections, rules or other legal basis relevant to their answers.

PAPER B: AMENDMENT OF A PATENT SPECIFICATION (BEFORE OR AFTER GRANT)
26 November 2002, Tuesday
1400 – 1700 hrs

Maximum Time: 3 Hours + 15 Minutes of reading time **Maximum Marks: 100 Points**

CLIENT'S LETTER

Dear Patent Agent,

Thank you for sending me the written opinion and the extract from GB Patent 2073709.

When I compare the drawings of my invention with the drawings in the cited GB Patent, it seems to me that there are lots of differences.

Please can you prepare a reply to the written opinion with whatever amendment you think is necessary?

Yours sincerely,

Client.

PAPER B: AMENDMENT OF A PATENT SPECIFICATION (BEFORE OR AFTER GRANT)

26 November 2002, Tuesday
1400 – 1700 hrs

Maximum Time: 3 Hours + 15 Minutes of reading time **Maximum Marks: 100 Points**

SINGAPORE PATENT APPLICATION No. 654321

This invention relates to a device for lifting a skip and off a road vehicle.

Skip handling vehicles are known in which a skip is loaded on and off the vehicle by a pair of lifting arms pivoting about a transverse axis. The arms are controlled by hydraulic means. The weight of a skip suspended behind a vehicle can impose a severe load on the structural members of the vehicle and in extreme cases makes the vehicle unstable.

The present invention has been made to deal with this problem.

According to the invention there is provided a device for lifting a skip between a transport position on a vehicle and an unloaded position in which the skip rests on a support surface off the vehicle comprising,

a) lifting arms movable between inboard and outboard positions relative to the vehicle,
b) an actuator for moving the lifting arms,
c) a leg on the vehicle movable by the actuator between a lower position for supporting the vehicle and an upper position clear of the support surface,
d) the arrangement being such that the lifting arms can only move to the outboard position when the leg is in its lower position.

In a preferred embodiment of the invention two legs are provided at the rear of the vehicle. The actuator preferably comprises a hydraulic device which moves both the lifting arms and the leg or legs.

One method of performing the invention will now be described by way of example with reference to the accompanying drawings in which,

Figure 1 is a side view of a vehicle with skip loaded onto it
Figure 2 is a side view of the vehicle of Figure 1 with the skip raised to an intermediate position for loading and unloading
Figure 3 is a side view of the vehicle of Figures 1 and 2 with the skip on the ground.

The embodiment illustrated includes a vehicle chassis 10 supported on four wheels, two of which are shown at 11 and 12. Mounted on the chassis are two lifting arm assemblies, only one of which can be seen in the drawings. Each lifting arm assembly includes a base member 14, an upstanding member 15 and an inclined member 16. Fitted on each upstanding member 15 is a plate 17 to which is pivotally attached the piston 18 (only visible in Figures 2 and 3) of a hydraulic actuator 19. The hydraulic actuator is connected to the chassis at 20.

A shaft 8 extends between the interconnected ends of the members 15 and 16. Chains 21 extend from the shaft 8 to support a skip 23. The chains are attached to bosses 22 on the skip.

A shaft 24 extends across the vehicle between the junctions of inclined members 16 and base members 14. A further shaft 25 also extends across the vehicle between the junctions of the upstanding members 15 and base members 14. Only the ends of these shafts can be seen in the drawings. A guide plate 7 is fixed to the chassis on each side of the vehicle and is provided with two arcuate slots 26 and 27. The shaft 25 is arranged to travel in slots 26 and the shaft 24 is arranged to travel in the slots 27.

As can be seen in Figure 1 when the skip 23 is loaded on the vehicle in the transport position the upstanding members 15 are inclined forwardly with respect to the vehicle. The shaft 25 is located at the lower end of the slots 26 and the shaft 24 at the upper end of slots 27.

Operation of the hydraulic actuator 19 to extend its piston 18 will cause rotation of the lifting arm assemblies clockwise about the shaft 25. This causes the shaft 24 to move down the slots 27 until it reaches the lower ends thereof as illustrated in Figure 2.

Legs 3 are pivotally connected to the chassis 10 at 31 and also linked to the shaft 24 by an arm 33. As the shaft moves to the lower end of the slots 27 the leg are pivoted clockwise about pivot point 31 from the upper position shown in Figure 1 to the lower position shown in Figure 2.

When the shaft 24 has reached the bottom of slots 27 further extension of the hydraulic piston 18 will now cause rotation of the lifting arm assemblies about shaft 24 and the shaft 25 to ride up the slots 26. This moves the lifting arm assemblies to the outboard position shown in Figure 3 and the skip 23 to the unloaded position where it rests on the ground.

To load the skip onto the vehicle the above sequence of operations is reversed.

The drawings illustrate what happens when there is no load in the skip. However when the skip is loaded as soon as the weight of the skip is taken by the vehicle the springs of the vehicle deflected such that the legs 3 will contact the ground when in the lower position shown in Figures 2 and 3. This means that when the weight of the loaded skip is taken by the ground the legs even in their lower position will be clear of the ground and the vehicle can manoeuvred even though the lifting arm assemblies are in the outboard position.

It will be clear from the forgoing description that the legs of the device must always be in the lower position before the lifting arm assemblies are moved outboard to a position where, without the lowered legs, the weight of a loaded skip suspended from the lifting arm assemblies would make the vehicle unstable.

CLAIMS

1. A device for lifting a skip between a transport position on a vehicle and an unloaded position in which the skip rests on a support surface off the vehicle comprising
a) lifting arms movable between inboard and outboard positions relative to the vehicle,
b) an actuator for moving the lifting arms,
c) a leg on the vehicle movable by the actuator between a lower position for supporting the vehicle and an upper position clear of the support surface,
d) the arrangement being such that the lifting arms can only move to the outboard position when the leg is in the lower position.

2. A device as claimed in claim 1, wherein the actuator is a hydraulic device.

3. A device as claimed in claim 1 or claim 2 wherein the leg is pivotally mounted on the vehicle.

4. A device as claimed in any preceding claim, wherein two legs are provided.

PAPER B: AMENDMENT OF A PATENT SPECIFICATION (BEFORE OR AFTER GRANT)
26 November 2002, Tuesday
1400 – 1700 hrs

Maximum Time: 3 Hours + 15 Minutes of reading time **Maximum Marks: 100 Points**

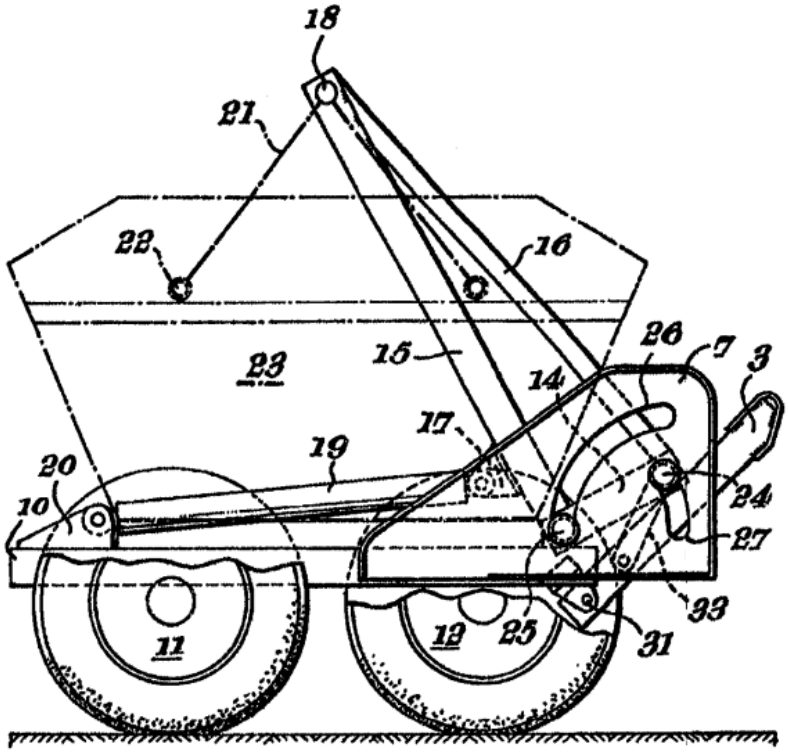

Fig. 1

PAPER B: AMENDMENT OF A PATENT SPECIFICATION (BEFORE OR AFTER GRANT)
26 November 2002, Tuesday
1400 – 1700 hrs

Maximum Time: 3 Hours + 15 Minutes of reading time **Maximum Marks: 100 Points**

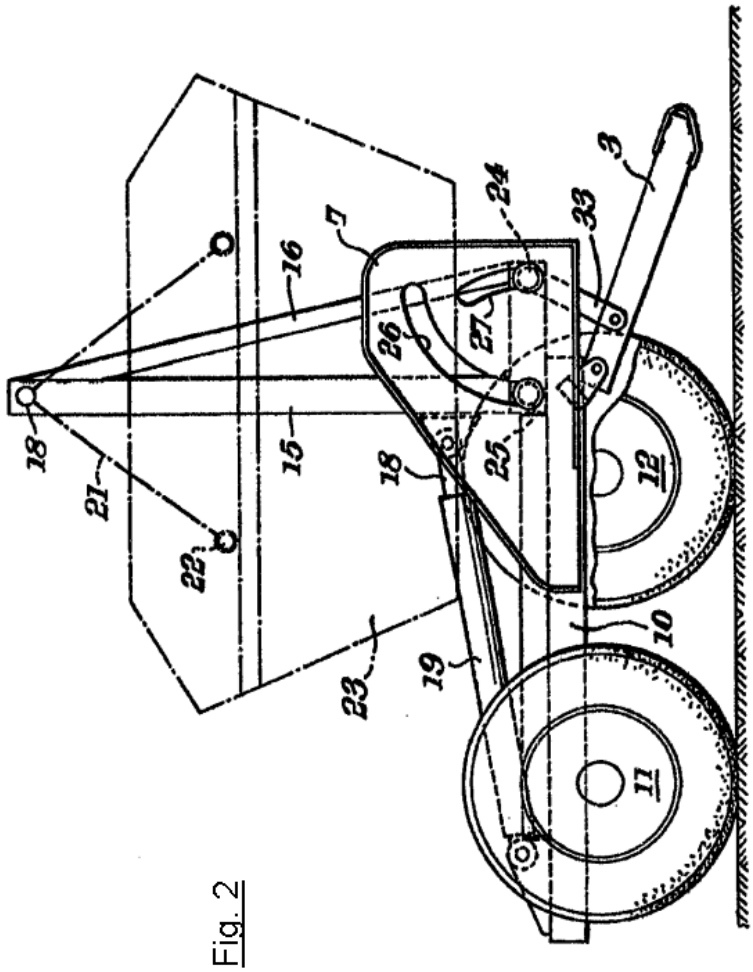

Fig. 2

PAPER B: AMENDMENT OF A PATENT SPECIFICATION (BEFORE OR AFTER GRANT)
26 November 2002, Tuesday
1400 – 1700 hrs

Maximum Time: 3 Hours + 15 Minutes of reading time **Maximum Marks: 100 Points**

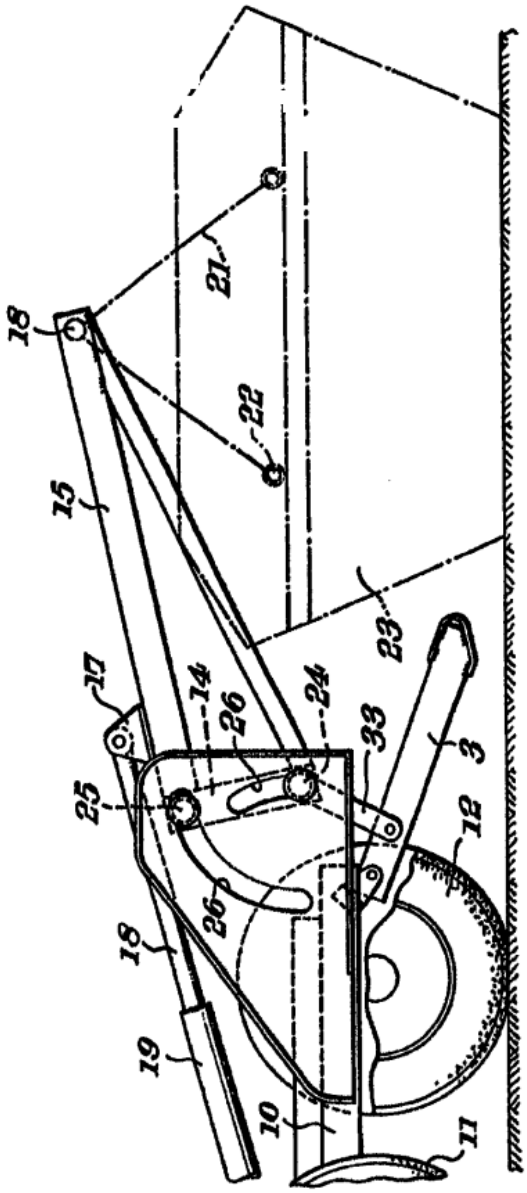

Fig. 3

PAPER B: AMENDMENT OF A PATENT SPECIFICATION (BEFORE OR AFTER GRANT)
26 November 2002, Tuesday
1400 – 1700 hrs

Maximum Time: 3 Hours + 15 Minutes of reading time **Maximum Marks: 100 Points**

WRITTEN OPINION

Statement

Novelty (N)	Claims 1 – 4	No
Inventive Step (IS)	Claims 1 – 4	Yes
Industrial Applicability	Claims 1 –4	Yes

Citations and explanations

The subject matter of claims 1 – 4 is not novel. Your attention is drawn to GB patent 2073709 which describes the skip loading and unloading device of the claims.

PAPER B: AMENDMENT OF A PATENT SPECIFICATION (BEFORE OR AFTER GRANT)
26 November 2002, Tuesday
1400 – 1700 hrs

Maximum Time: 3 Hours + 15 Minutes of reading time **Maximum Marks: 100 Points**

GB PATENT 2079709 (EXTRACT)

Figure 1 is a side elevation showing a device mounted on a vehicle for lifting a skip from a lower position into an upper position on the vehicle,

Figure 2 is a side elevation showing the skip in its upper position.

The skip loading device shown in the drawings comprises a pair of lifting devices only one of which can be seen. Each lifting device has a base frame 10 mounted on the vehicle 11. A lifting arm 12 is pivotally mounted at end 13 to the base frame 10 for movement between the position in Figure 1 and that shown in Figure 2. At the free end 14 of the lifting arm is a trunnion 15 from which depend a pair of chains 16.

A supporting leg 18 is connected to each base frame 10 by an upper link 19 and a lower link 20 of a parallel linkage which permits the leg 18 to move between an extended position as shown in Figure 1 and a retracted position shown in Figure 2.

The upper and lower links 19 and 20 move within a pair of side plates of which only the outer 21 is visible in the drawings. A retaining pin 22 for the leg 18 is carried in aligned holes in the plates 21 so that the pin extends across the locus of movement of the upper link 19.

With the leg 18 in the extended position shown in Figure 1 the pin 22 projects through a further aligned hole in the upper link 19 to retain the leg in the extended position. When the leg is in the retracted position the pin extends behind the upper link 19 preventing movement of the leg from the retracted position.

Each lifting arm 12 is provided with a double acting hydraulic piston and cylinder assembly 23 pivotally connected at one end to the lifting arm 12 and at its other end to the upper link 19.

In use the lifting arms 12 initially occupy the position shown in Figure 2 and the legs 18 are in the retracted position as shown in Figure 2. For picking up or unloading a skip the retaining pins 22 are removed. The hydraulic assembly is operated to extend its length whereby the legs 18 pivot on their parallel linkages into the extended position shown in Figure 1. The pins are then replaced in the holes in plate 21 also passing through the upper links 19. The legs are now secure in the extended position.

The hydraulic assembly 23 is now operated to reduce its length and this causes the lifting arms to move from the position shown in Figure 2 to the position shown in Figure 1.

It will be apparent that if the legs 18 were to be left in their retracted position the arm 12 could not be moved into the position shown in Figure 1 because the hydraulic assemblies would reach their minimum length soon after actuation.

To load the skip onto the vehicle from the position shown in Figure 1 the hydraulic assembly 23 is increased in length. The legs 18 bear at least a part of the weight of the skip during this loading step. With the skip on the vehicle the pins 22 are removed and the hydraulic assembly operated to bring the legs into their retracted position the pins 22 being then replaced.

PAPER B: AMENDMENT OF A PATENT SPECIFICATION (BEFORE OR AFTER GRANT)
26 November 2002, Tuesday
1400 – 1700 hrs

Maximum Time: 3 Hours + 15 Minutes of reading time **Maximum Marks: 100 Points**

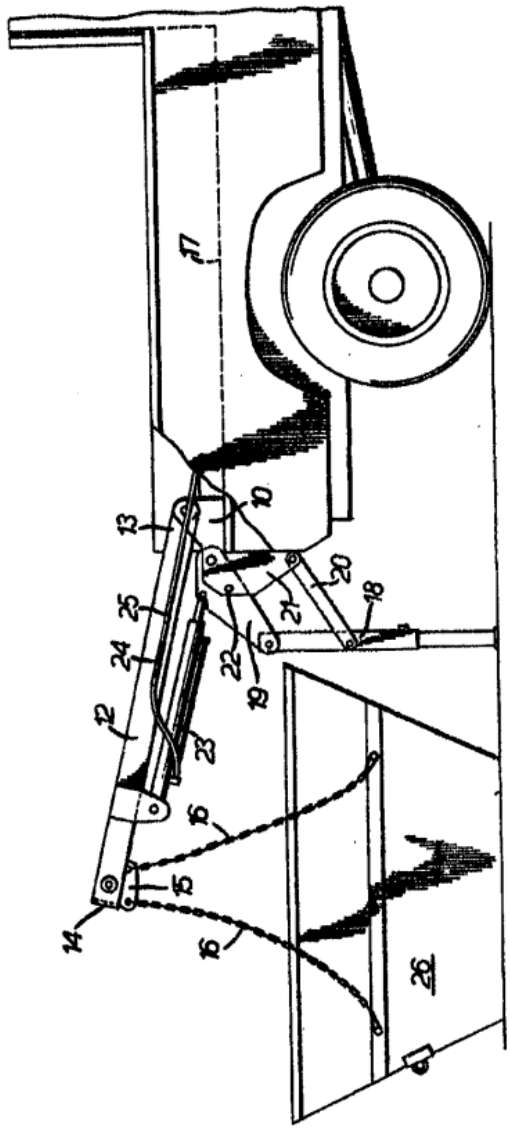

Fig. 1

PAPER B: AMENDMENT OF A PATENT SPECIFICATION (BEFORE OR AFTER GRANT)
26 November 2002, Tuesday
1400 – 1700 hrs

Maximum Time: 3 Hours + 15 Minutes of reading time **Maximum Marks: 100 Points**

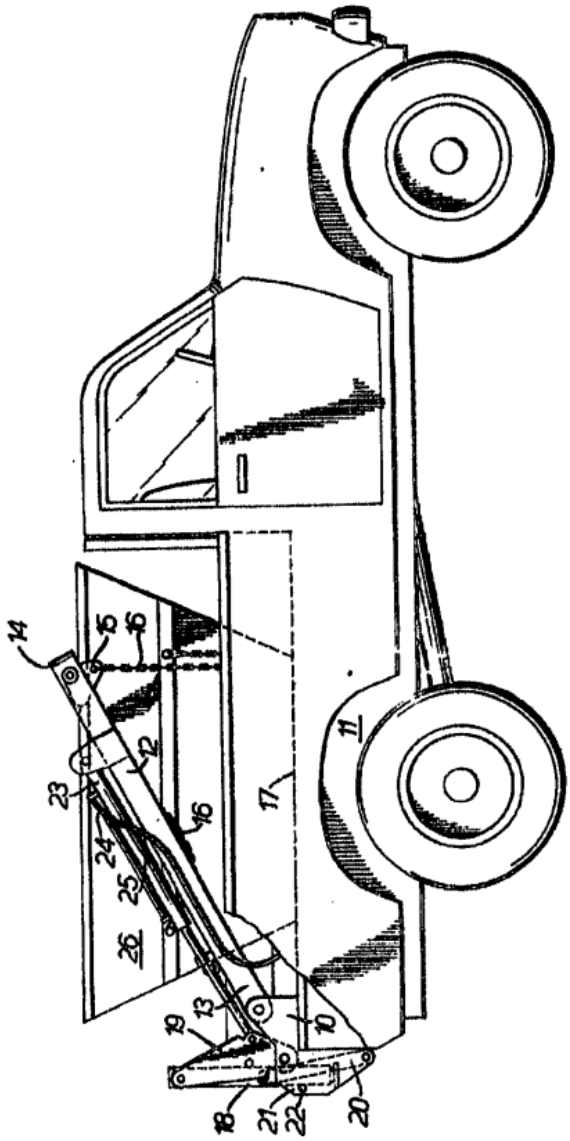

Fig. 2