INTELLECTUAL PROPERTY OFFICE OF SINGAPORE

QUALIFYING EXAMINATION FOR THE REGISTRATION OF PATENT AGENTS

PAPER C: INFRINGEMENT AND VALIDITY OF SINGAPORE PATENT
27 November 2002, Wednesday
1400 – 1700 hrs

Maximum Time: 3 Hours + 15 Minutes of reading time **Maximum Marks: 100 Points**

LIGHTING UP YOUR CREATIVITY

INSTRUCTION TO CANDIDATES

1. This Paper consists of 7 sheets, including this cover sheet.

2. 15 minutes of reading time is provided. You are advised to spend this time reading the instructions and the question(s) before you attempt to answer the question(s).

3. Write your answers in English. Answers in any other language will not be marked.

4. Only your answers to the question(s) written or pasted in the Answer Booklet (that is provided by the Examination Secretariat) would be considered. You are advised to write on one side of each sheet in the Answer Booklet and to commence your answer to each question (where applicable) on a fresh sheet.

5. Write on one side of the paper only.

6. Marks are awarded more for the points selected for discussion and reasoning displayed than for conclusions reached.

7. You should accept the facts given in the papers and not use any special knowledge you may have. Assume also that the prior art given is exhaustive.

PAPER C: INFRINGEMENT AND VALIDITY OF SINGAPORE PATENT
27 November 2002, Wednesday
1400 – 1700 hrs

Maximum Time: 3 Hours + 15 Minutes of reading time **Maximum Marks: 100 Points**

CLIENT'S LETTER

"You will remember helping me to obtain my Singapore Patent 543,210 for a blister pack and keeping the patent in force by paying the renewal fees. We are using the invention to package tablets that are being marketed in Singapore. We have found a blister pack being used by a competitor in Singapore. Details are set out in the enclosed description (C1). We believe that that is an infringement of our patent. Please, can you tell me if that is so?

Yours faithfully,
Client.

Advise the client on infringement and validity of his Patent, whether the Patent should be amended and if so the consequences of amendment and also on the other questions asked by him. Your advice can be in the form of notes or a letter to the client but in either case you must provide reasons for your advice.

Further information

You check the file of the Patent from which you see that the Application leading to the Patent was an International Application designating Singapore. There is an International Search report and an International Preliminary Examination Report, both of which refer to Prior Art Specification D1 as being relevant to novelty. No amendment was made during the International Phase nor during the Singapore National Phase.

PAPER C: INFRINGEMENT AND VALIDITY OF SINGAPORE PATENT
27 November 2002, Wednesday
1400 – 1700 hrs

Maximum Time: 3 Hours + 15 Minutes of reading time **Maximum Marks: 100 Points**

SINGAPORE PATENT 543,210

This invention relates to packaging and more particularly a so-called blister pack especially useful for pharmaceutical products.

Blister packs are well known. They usually comprise a sheet of plastics having one or more cavities formed therein which can accommodate pharmaceutical product in tablet or other form. A sheet of metal foil is laminated to the plastics sheet so that each cavity is sealed. To remove the product from the blister pack pressure is applied to the exterior of the cavity causing the cavity to deform and the foil over the cavity to rupture whereupon the product can be removed from the cavity.

While these kinds of package have found wide usage there is one significant problem with them. In order to rupture the foil over the cavity the pressure applied to the exterior of the cavity must be transmitted to the foil via the product in the cavity. When the product is a tablet the application of pressure to the tablet may break it and in some cases cause the tablet to disintegrate completely.

According to the invention there is provided a package comprising a first sheet having at least one depression formed therein, said depression being capable of receiving a product preferably in tablet form, and a peelable second sheet extending over the top of the depression so as to seal the depression.

With the invention the contents of the depression can be accessed by peeling the second sheet from the first sheet and no pressure needs to be applied to the exterior of the depression.

In a preferred embodiment of the invention the or each depression is rigid thereby ensuring that the contents cannot be damaged even if pressure is inadvertently applied to the exterior of the cavity. A cover layer may be provided over the peelable second sheet. The cover layer is adhered to the second sheet such that when the cover layer is removed the second sheet is peeled from the first sheet.

A specific embodiment of the invention will now be described by way of an example with reference to the accompanying drawing which is a diagrammatic cross section through a package.

Referring to the drawing a package for pharmaceutical products, in particular tablets, comprises a sheet of plastics 12 formed with a plurality of cavities 14. Each cavity is intended to receive a table 10 as illustrated.

A second sheet 16 of thin foil is laminated to the first sheet 12 thereby sealing the tablets in their respective cavities 14. A cover layer 18 of flexible plastics is adhered to the side of the second sheet remote 16 from the first sheet 12.

When the cover layer 18 is removed from the assembly it peels the second sheet 16 from the first sheet thereby allowing access to the tablets 10 in the cavities 14. In order to limit the amount of second sheet 16 actually removed from the first sheet 12 a line of weakness 22 is provided in the second sheet around the part 20 of the second sheet that covers each depression. This helps to ensure that when the cover layer 18 is removed to release one tablet 10 from the package, the other tablets in the package remain sealed in their respective cavities 14.

The first sheet 12 preferably of rigid material particularly in the region of the cavities. This provides protection for product disposed in the cavities so that pressure applied to the exterior of the cavities will not damage the product.

PAPER C: INFRINGEMENT AND VALIDITY OF SINGAPORE PATENT
27 November 2002, Wednesday
1400 – 1700 hrs

Maximum Time: 3 Hours + 15 Minutes of reading time **Maximum Marks: 100 Points**

CLAIMS

1. A package comprising a first sheet having at least one depression formed therein, said depression being capable of receiving a product preferably in tablet form, and a peelable second sheet extending over the top of the depression so as to seal the depression.

2. A package as claimed in claim 1, wherein a cover layer is adhered to the second sheet, removal of the cover layer causing the second sheet to be peeled from the first sheet.

3. A package as claimed in claim 1 or claim 2 wherein the second sheet has a line of weakness around the part of the second sheet that extends over a depression.

4. A package as claimed in any preceding claim wherein the part of the first sheet forming said at least one depression is rigid.

PAPER C: INFRINGEMENT AND VALIDITY OF SINGAPORE PATENT
27 November 2002, Wednesday
1400 – 1700 hrs

Maximum Time: 3 Hours + 15 Minutes of reading time **Maximum Marks: 100 Points**

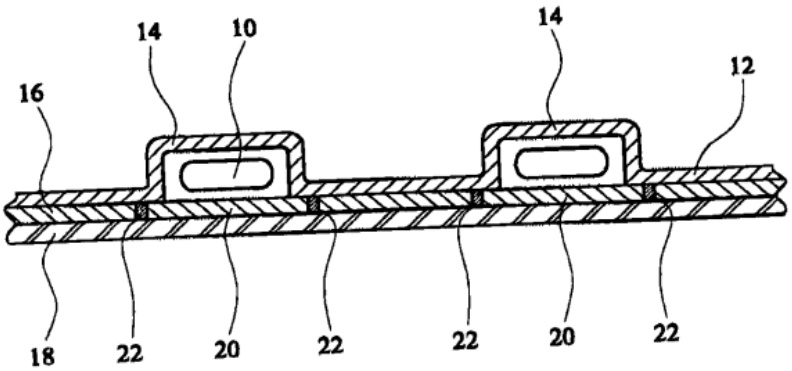

PAPER C: INFRINGEMENT AND VALIDITY OF SINGAPORE PATENT
27 November 2002, Wednesday
1400 – 1700 hrs

Maximum Time: 3 Hours + 15 Minutes of reading time **Maximum Marks: 100 Points**

PRIOR ART SPECIFICATION D1

A food package particularly for dairy products such as yoghurt, butter and the like comprising an open topped container of non-flexible plastics having a rim around the top. The top is closed by a sheet of foil stuck to the rim. To open the package foil is stripped off the trim.

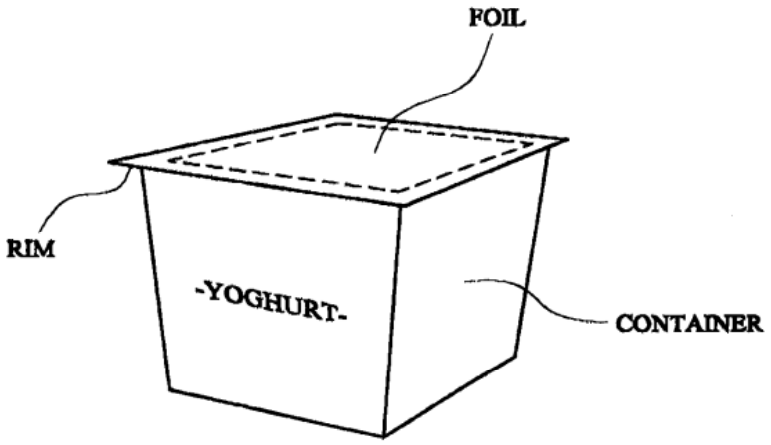

PAPER C: INFRINGEMENT AND VALIDITY OF SINGAPORE PATENT
27 November 2002, Wednesday
1400 – 1700 hrs

Maximum Time: 3 Hours + 15 Minutes of reading time **Maximum Marks: 100 Points**

COMPETITORS' PRODUCT C1

A childproof package for dangerous drug consists of a layer having a cup for the drug. The cup is closed by a foil lid adhered to the layer.

The foil lid is overlaid by a rigid cover strip and the assembly of cup, lid and cover strip is enclosed by an outer packaging sheet strongly adhered to the underside of the layer having a cup and sealed to itself to make the package air tight.
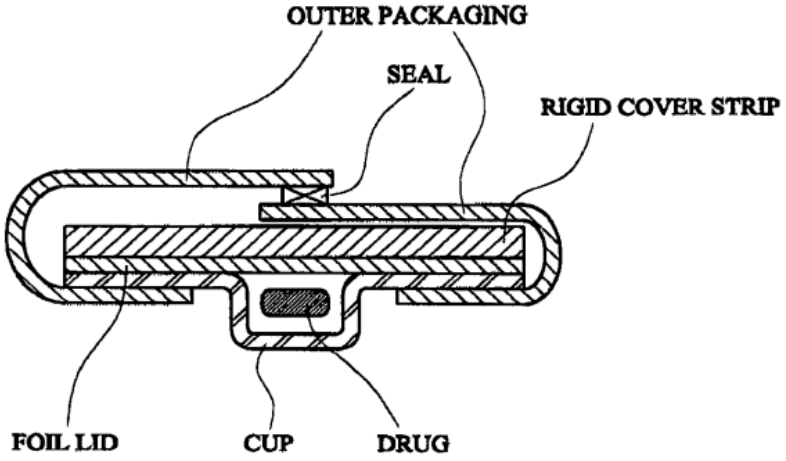
To open the package the outer packaging sheet is unsealed and removed. The strong adhesion of the outer packaging to the layer separates the layer from the foil lid thereby exposing the drug in the cup.