INTELLECTUAL PROPERTY OFFICE OF SINGAPORE

QUALIFYING EXAMINATION FOR THE REGISTRATION OF PATENT AGENTS

PAPER A: PREPARATION OF A PATENT SPECIFICATION
25 November 2002, Monday
1400 – 1700 hrs

Maximum Time: 3 Hours + 15 Minutes of reading time **Maximum Marks: 100 Points**

LIGHTING UP YOUR CREATIVITY

INSTRUCTION TO CANDIDATES

1. This Paper consists of 10 sheets, including this cover sheet.

2. 15 minutes of reading time is provided. You are advised to spend this time reading the instructions and the question(s) before you attempt to answer the question(s).

3. Write your answers in English. Answers in any other language will not be marked.

4. Only your answers to the question(s) written or pasted in the Answer Booklet (that is provided by the Examination Secretariat) would be considered. You are advised to write on one side of each sheet in the Answer Booklet and to commence your answer to each question (where applicable) on a fresh sheet.

5. Write on one side of the paper only.

6. You should accept the facts given in the paper and not use any special knowledge you may have. Assume also that the prior art given is exhaustive.

PAPER A: PREPARATION OF A PATENT SPECIFICATION
25 November 2002, Monday
1400 – 1700 hrs

Maximum Time: 3 Hours + 15 Minutes of reading time **Maximum Marks: 100 Points**

CLIENT'S LETTER

"I have been thinking about how to make it easier for disabled people in wheel chairs to operate light switches. These are frequently located on walls at a height, which cannot be reached by someone in a wheel chair. Of course, it is possible to re-locate a light switch at a different position on a wall but that usually requires the services of an electrician and is expensive.

What I propose is something that can be fitted to existing light switches by anyone. My invention takes two slightly different forms in order to be compatible with two different kinds of light switches, the so-called toggle type and the rocker type. These two types are illustrated in the attached sheet 1 of drawings. It should be understood that the positions 'off' and 'on' are used for convenience since it is possible that, due to wiring, the switch may turn on a light when in the position illustrated as 'off' and turn off a light when the position illustrated as 'on'. Furthermore it should be remembered that switches such as those illustrated could be used to control other electrical appliances and not just lights.

I have sketched the invention to be applied to a rocker switch on Sheet 2 attached. When the rod is pulled, the rocker switch is turned on. Then when the rod is pushed up, the rocker switch is turned off.

The switch can still be accessed through the slot for people not requiring assistance.

Movement of the actuator is limited by the pin engaging the ends of the slot. If more limited movement is required, stops (not illustrated) can be provided inside the cover.

The rod can be adjustable in length so as to make the invention suitable for switches at any height from floor level. A handle can be provided at its free end.

Sheet 3 shows the invention applied to a toggle switch. The assembly is very much the same as that for a rocker switch except that an aperture is formed in the actuator which is fitted over the toggle component of the switch. Thus when the actuator is moved down from the position illustrated the toggle is moved from the 'off' position to the 'on' position. And moving the actuator up returns the toggle to the 'off' position.

A pin can still be provided in the arrangement shown in Sheet 3, so that the switch can be operated manually by moving the pin along the slot.

Please can you prepare a patent specification and claims for my invention?

By the way I am enclosing an extract from US Patent No.5782342 which shows a device which is a bit like my invention but not so good!"

PAPER A: PREPARATION OF A PATENT SPECIFICATION
25 November 2002, Monday
1400 – 1700 hrs

Maximum Time: 3 Hours + 15 Minutes of reading time **Maximum Marks: 100 Points**

SHEET 1

ROCKER TYPE SWITCH

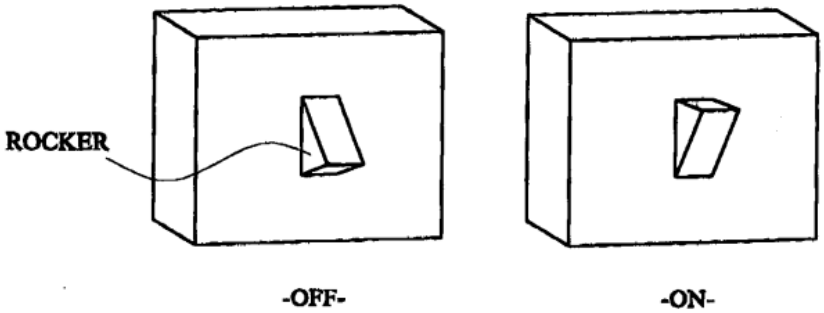

TOGGLE TYPE SWITCH

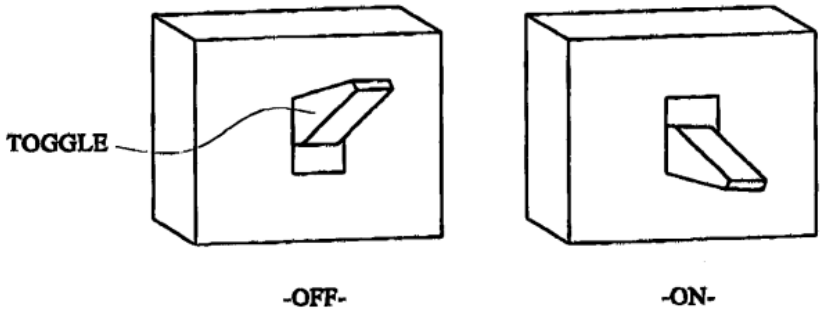

PAPER A: PREPARATION OF A PATENT SPECIFICATION
25 November 2002, Monday
1400 – 1700 hrs

Maximum Time: 3 Hours + 15 Minutes of reading time **Maximum Marks: 100 Points**

SHEET 2

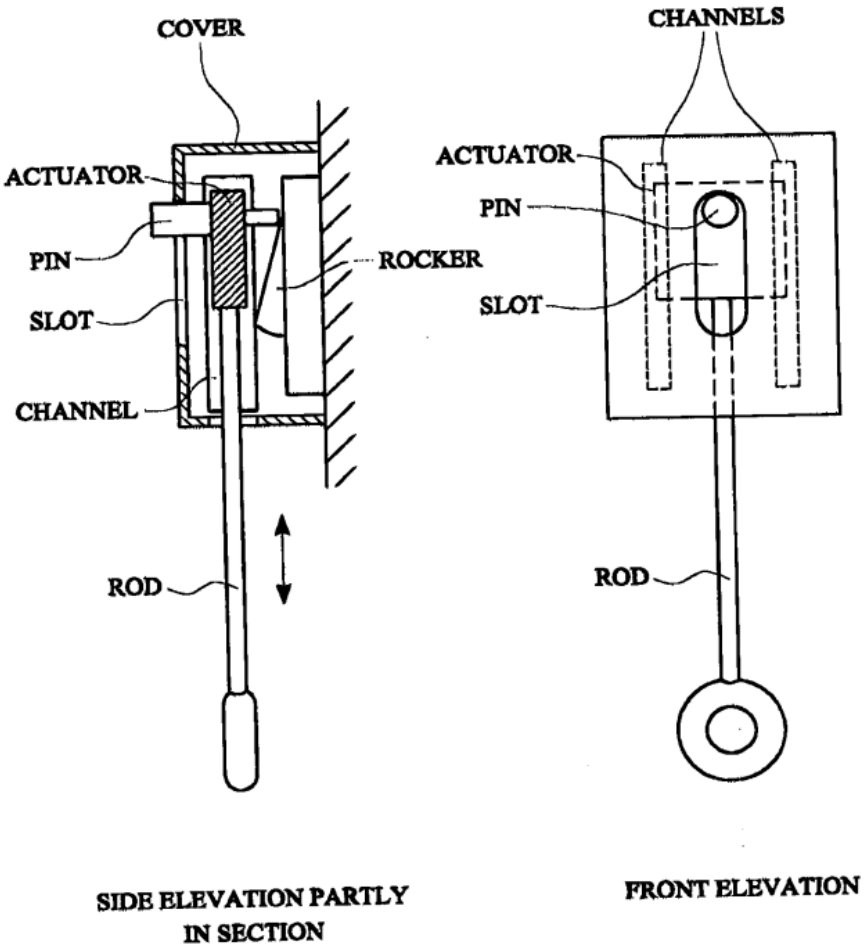

PAPER A: PREPARATION OF A PATENT SPECIFICATION
25 November 2002, Monday
1400 – 1700 hrs

Maximum Time: 3 Hours + 15 Minutes of reading time **Maximum Marks: 100 Points**

SHEET 3

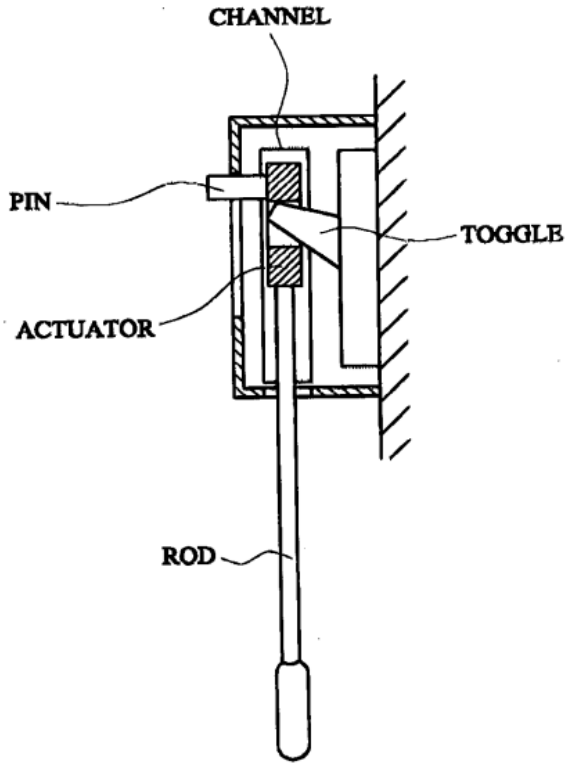

SIDE ELEVATION PARTLY
IN SECTION

PAPER A: PREPARATION OF A PATENT SPECIFICATION
25 November 2002, Monday
1400 – 1700 hrs

Maximum Time: 3 Hours + 15 Minutes of reading time **Maximum Marks: 100 Points**

SHEET 1

ROCKER TYPE SWITCH

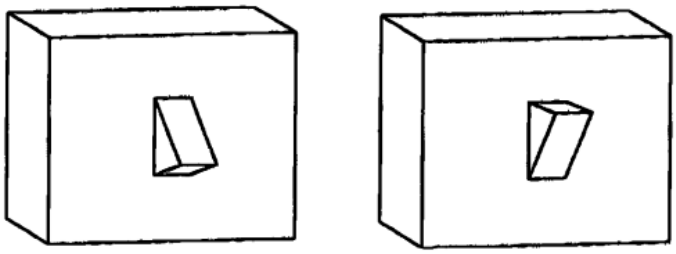

-OFF- -ON-

TOGGLE TYPE SWITCH

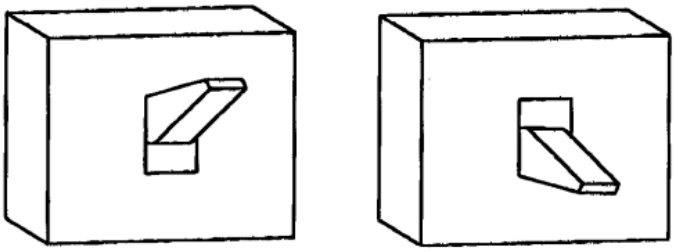

-OFF- -ON-

PAPER A: PREPARATION OF A PATENT SPECIFICATION
25 November 2002, Monday
1400 – 1700 hrs

Maximum Time: 3 Hours + 15 Minutes of reading time **Maximum Marks: 100 Points**

SHEET 2

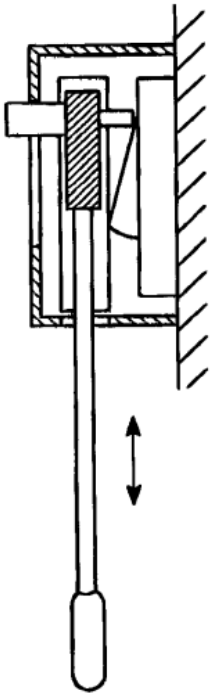

SIDE ELEVATION PARTLY IN SECTION

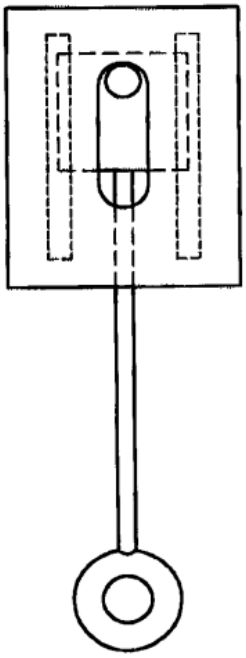

FRONT ELEVATION

PAPER A: PREPARATION OF A PATENT SPECIFICATION
25 November 2002, Monday
1400 – 1700 hrs

Maximum Time: 3 Hours + 15 Minutes of reading time **Maximum Marks: 100 Points**

SHEET 3

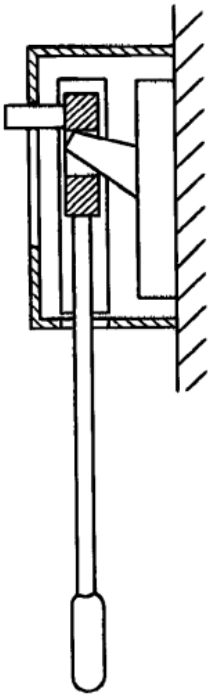

SIDE ELEVATION PARTLY IN SECTION

PAPER A: PREPARATION OF A PATENT SPECIFICATION
25 November 2002, Monday
1400 – 1700 hrs

Maximum Time: 3 Hours + 15 Minutes of reading time **Maximum Marks: 100 Points**

US PATENT No. 5,782,342 (EXTRACT)

The drawing shows a light switch assembly 10 comprising a rod 20 having an aperture through one of its ends and a ring 18 connected through the aperture. The ring is connected through a hole in a light switch lever 16. Screws 14 are used to secure the switch to a wall surface.

As rod 20 is raised to lift ring 18, light switch lever 16 is also lifted to turn on an associated light. When rod 20 is lowered to bring down ring 18, switch lever 16 is also lowered to turn off an associated light.

PAPER A: PREPARATION OF A PATENT SPECIFICATION
25 November 2002, Monday
1400 – 1700 hrs

Maximum Time: 3 Hours + 15 Minutes of reading time **Maximum Marks: 100 Points**
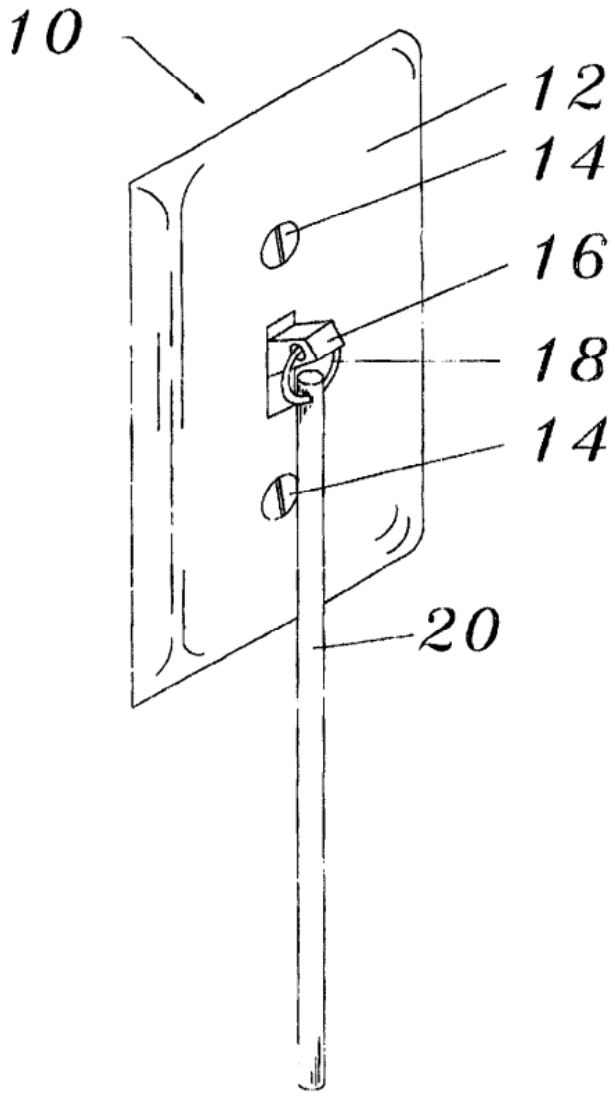
U.S. Patent **Jul. 21, 1998** **5,782,342**